ADMINISTRATION GUIDE

Cisco Small Business
SPA2102, SPA3102, SPA8000, SPA8800, PAP2T

Analog Telephone Adapters

Cisco and the Cisco Logo are trademarks of Cisco Systems, Inc. and/or its affiliates in the U.S. and other countries. A listing of Cisco's trademarks can be found at **www.cisco.com/go/trademarks**. Third party trademarks mentioned are the property of their respective owners. The use of the word partner does not imply a partnership relationship between Cisco and any other company. (1005R)

Contents

About This Document 11

Chapter 1: Introducing Cisco Small Business Analog Telephone Adapters 16

Comparison of ATA Devices 17

ATA Connectivity Requirements 20

PAP2T Connectivity 21

SPA2102 Connectivity 22

SPA3102 Connectivity 23

SPA8000 Connectivity 24

SPA8800 Connectivity 25

ATA Software Features 26

Voice Supported Codecs 26

SIP Proxy Redundancy 28

Other ATA Software Features 28

Chapter 2: Basic Administration and Configuration 36

Basic Services and Equipment Required 36

Downloading Firmware 37

Basic Installation and Configuration 37

Upgrading the Firmware for the ATA Device 37

Setting up Your ATA Device 38

Using the Administration Web Server 39

Connecting to the Administration Web Server 40

Setting Up the WAN Configuration for Your ATA Device 40

Registering to the Service Provider 42

Advanced Configurations 43

Upgrading, Rebooting, and Resyncing Your ATA Device 43

Upgrade URL 43

Resync URL 44

Reboot URL 44

Provisioning Your ATA Device 45

Provisioning Capabilities 45
Configuration Profile 46

Chapter 3: Configuring Your System for ITSP Interoperability 47

Network Address Translation (NAT) and Voice over IP (VoIP) 47
NAT Mapping with Session Border Controller 48
NAT Mapping with SIP-ALG Router 48
Configuring NAT Mapping with a Static IP Address 48
Configuring NAT Mapping with STUN 50
Determining the Router's NAT Mechanism 52
Firewalls and SIP 53
Configuring SIP Timer Values 53

Chapter 4: Configuring Voice Services 54

Supported Codecs 54
Using a FAX Machine 55
Fax Troubleshooting 56
Managing Caller ID Service 58
Silence Suppression and Comfort Noise Generation 60
Configuring Dial Plans 61
About Dial Plans 61
Editing Dial Plans 70
Secure Call Implementation 71
Enabling Secure Calls 71
Secure Call Details 72
Using a Mini-Certificate 73
Generating a Mini Certificate 73
SIP Trunking and Hunt Groups on the SPA8000 75
About SIP Trunking 76
Setting the Trunk Group Call Capacity 78
Inbound Call Routing for a Trunk Group 78

Contact List for a Trunk Group 79
Outgoing Call Routing for a Trunk Group 81
Configuring a Trunk Group 82
Trunk Group Management 83
Setting the Hunt Policy 85
Additional Notes About Trunk Groups 85

Chapter 5: Configuring Music on Hold 86
Using the Internal Music Source for Music On Hold 86
Using the Internal Music Source 86
Changing the Music File for the Internal Music Source 87
Configuring a Streaming Audio Server 88
About the Streaming Audio Server 88
Configuring the Streaming Audio Server 90
Using the IVR with an SAS Line 91

Chapter 6: Configuring the PSTN (FXO) Gateway on the SPA3102 92
Connecting to PSTN and VoIP Services 92
How VoIP-To-PSTN Calls Work 93
One-Stage Dialing (SPA3102 and SPA8800) 93
Two-Stage Dialing (SPA3102) 94
How PSTN-To-VoIP Calls Work 95
Terminating Gateway Calls 96
VoIP Outbound Call Routing (SPA3102) 97
Configuring VoIP Failover to PSTN 98
Sharing One VoIP Account Between the FXS and PSTN Lines (SPA3102) 98
Other Options 99
PSTN Call to Ring Line 1 (SPA3102) 99
Symmetric RTP (SPA3102 and SPA8800) 99
Call Progress Tones (SPA3102 and SPA8800) 100
Call Scenarios 100

PSTN to VoIP Call with and Without Ring-Thru 101
VoIP to PSTN Call With and Without Authentication 101
Call Forwarding to PSTN Gateway (SPA3102 and SPA8800) 103

Appendix A: ATA Routing Field Reference 105

Router Status page 105
Product Information section 106
System Status section 106
WAN Status page 107
Internet Connection Settings section 107
Static IP Settings section 108
PPPoE Settings section 108
Optional Settings section 109
MAC Clone Settings section 110
Remote Management section 110
QOS Settings section 110
VLAN Settings section 111
LAN Status page 111
Networking Service section 111
LAN Networking Settings section 112
Static DHCP Lease Settings section 112
Application page 112
Port Forwarding Settings section 113
DMZ Settings section 113
Miscellaneous Settings section 114
System Reserved Ports Range section 114

Appendix B: ATA Voice Field Reference 115

Info page 116
Product Information section 116
System Status section 117
Line Status section 117

System Information section (PAP2T) 120
PSTN Line Status section (SPA3102) 120
Trunk Status section (SPA8000) 123
System page 124
System Configuration section 124
Internet Connection Type section (PAP2T) 125
Optional Network Configuration section (PAP2T) 125
Miscellaneous Settings section (not used with PAP2T) 126
SIP page 127
SIP Parameters section 127
SIP Timer Values (sec) section 129
Response Status Code Handling section 131
RTP Parameters section 132
SDP Payload Types section 134
NAT Support Parameters section 135
Trunking Parameters section (SPA8000) 138
Regional page 139
Call Progress Tones section 140
Distinctive Ring Patterns section 142
Distinctive Call Waiting Tone Patterns section 143
Distinctive Ring/CWT Pattern Names section 144
Ring and Call Waiting Tone Spec section 145
Control Timer Values (sec) section 146
Vertical Service Activation Codes section 148
Vertical Service Announcement Codes section (SPA2102, SPA8000) 154
Outbound Call Codec Selection Codes section 154
Miscellaneous section 156
Line page 160
Line Enable section 161
Streaming Audio Server (SAS) section 162
NAT Settings section 163
Network Settings section 164

SIP Settings section 165
Call Feature Settings section 168
Proxy and Registration section 169
Subscriber Information section 171
Supplementary Service Subscription section 172
Audio Configuration section 174
Gateway Accounts section (SPA3102) 179
VoIP Fallback to PSTN section (SPA3102 and SPA8800) 180
Dial Plan section 180
FXS Port Polarity Configuration section 182
VoIP-to-PSTN Gateway Setup section (SPA8800) 183
PSTN-To-VoIP Gateway Setup section (SPA8800) 183
FXO Timer Values (sec) section (SPA8800) 184
PSTN Disconnect Detection section (SPA8800) 185
International Control section (SPA8800) 188
Call Forward, Speed Dial, Supplementary Services, and Ring Settings (SPA8000 and SPA8800) 189
Trunk Group page (SPA8000) 190
Line Enable section 190
Network Settings section 190
SIP Settings section 191
Subscriber Information section 194
Dial Plan section 196
NAT Settings section 196
Proxy and Registration section 197
PSTN Line page (SPA3102) 198
Line Enable section 199
NAT Settings section 199
Network Settings section 200
SIP Settings section 201
Proxy and Registration section 204
Subscriber Information section 205

Audio Configuration section 206
Dial Plans section 210
VoIP-To-PSTN Gateway Setup section 210
VoIP Users and Passwords (HTTP Authentication) section 212
Ring Settings section 213
FXO (PSTN) Timer Values (sec) section 213
PSTN Disconnect Detection section 215
International Control (Settings) section 218
User page 220
Call Forward Settings section 221
Selective Call Forward Settings section 222
Speed Dial Settings section 222
Supplementary Service Settings section 223
Distinctive Ring Settings section 224
Ring Settings section 225
PSTN User page (SPA3102) 226
PSTN-To-VoIP Selective Call Forward Settings section 226
PSTN-To-VoIP Speed Dial Settings section 227
PSTN Ring Thru Line 1 Distinctive Ring Settings section 227
PSTN Ring Thru Line 1 Ring Settings section 227

Appendix C: Troubleshooting 229

Appendix D: Environmental Specifications 233
PAP2T 233
SPA2102 234
SPA3102 234
SPA8000 235
SPA8800 235
WRTP54G 236

Appendix E: Where to Go From Here 237

Product Resources 237
Related Documentation 238

About This Document

This guide is intended to help VARs and Service Providers to manage and configure the Cisco Analog Telephone Adapters (ATAs). This preface provides helpful information about this guide and other resources that are available to you. Before you begin to use this guide, refer to the following topics:

- "Purpose," on page 11
- "Audience," on page 11
- "Document Conventions," on page 12
- "Finding Information in PDF Files," on page 13

Purpose

This document provides information that administrators can use to configure and manage Cisco ATAs that are used in conjunction with the SPA9000 Voice System.

Audience

This document is written for the following audience:

- Service providers offering services using LVS products
- VARs and resellers who need LVS configuration references
- System administrators or anyone who performs LVS installation and administration

NOTE This guide does not provide the configuration information required by specific service providers. Please consult with the service provider for specific service parameters.

Document Conventions

The following are the typographic conventions used in this document.

Typographic Element	Meaning
Boldface	May indicate either of the following: ▪ A user interface element that you need to click, select, or otherwise act on ▪ A literal value to be entered in a field.
Italic	May indicate either of the following: ▪ A variable that should be replaced with a literal value. ▪ The name of a page, section, or field in the user interface
`Monospaced Font`	Indicates code samples or system output.

Finding Information in PDF Files

The SPA9000 Voice System documents are published as PDF files. The PDF Find/Search tool within Adobe® Reader® lets you find information quickly and easily online. You can perform the following tasks:

- Search an individual PDF file.
- Search multiple PDF files at once (for example, all PDFs in a specific folder or disk drive).
- Perform advanced searches.

Finding Text in a PDF

Follow this procedure to find text in a PDF file.

STEP 1 Enter your search terms in the Find text box on the toolbar.

NOTE By default, the Find tool is available at the right end of the Acrobat toolbar. If the Find tool does not appear, choose **Edit > Find**.

STEP 2 Optionally, click the arrow next to the Find text box to refine your search by choosing special options such as Whole Words Only.

STEP 3 Press **Enter**.

STEP 4 Acrobat displays the first instance of the search term.

STEP 5 Press **Enter** again to continue to more instances of the term.

Finding Text in Multiple PDF Files

The *Search* window lets you search for terms in multiple PDF files that are stored on your PC or local network. The PDF files do not need to be open.

STEP 1 Start Acrobat Professional or Adobe Reader.

STEP 2 Choose **Edit** > **Search**, or click the arrow next to the *Find* box and then choose **Open Full Acrobat Search**.

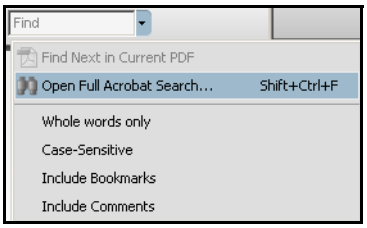

STEP 3 In the *Search* window, complete the following steps:

a. Enter the text that you want to find.

b. Choose **All PDF Documents in**.

From the drop-down box, choose **Browse for Location**. Then choose the location on your computer or local network, and click **OK**.

c. If you want to specify additional search criteria, click **Use Advanced Search Options**, and choose the options you want.

d. Click **Search**.

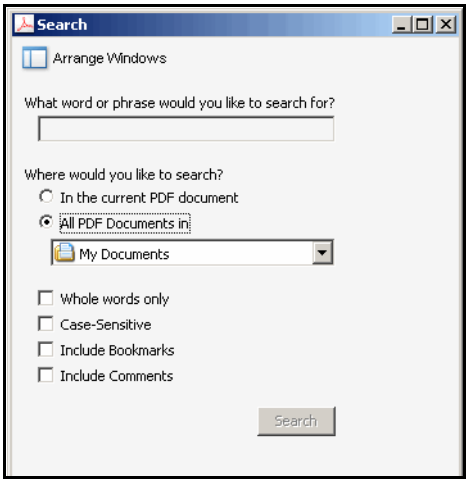

STEP 4 When the Results appear, click + to open a folder, and then click any link to open the file where the search terms appear.

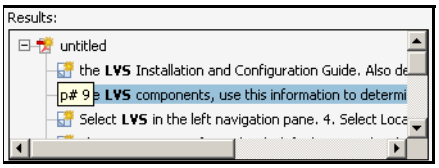

For more information about the Find and Search functions, see the Adobe Acrobat online help.

1

Introducing Cisco Small Business Analog Telephone Adapters

This guide describes the administration and use of Cisco Small Business analog telephone adapters (ATAs). These ATA devices are a key element in the end-to-end IP Telephony solution. An ATA device provides user access to Internet phone services through one or more standard telephone RJ-11 phone ports using standard analog telephone equipment. The ATA device connects to a wide area IP network, such as the Internet, through a broadband (DSL or cable) modem or router. The ATA can be used with an onsite call-control system such as the SPA9000 Voice System or legacy PBX, or with an Internet-based call-control system.

Figure 1 ATA Deployment without Onsite Call Control

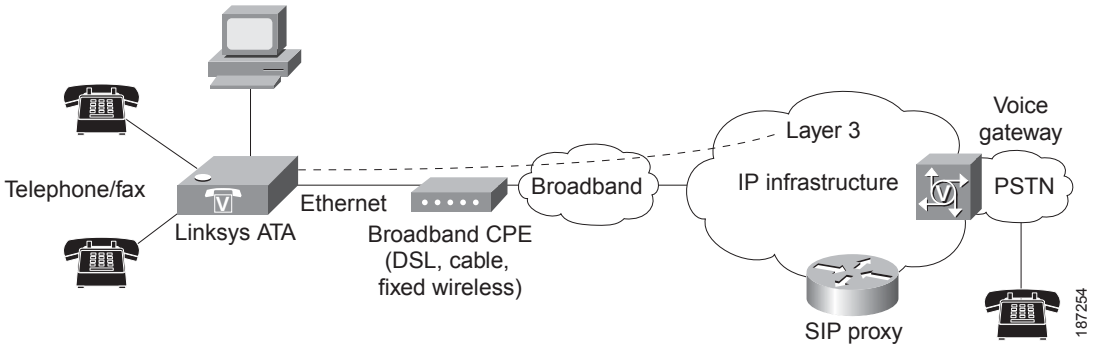

Figure 2 ATA Deployment with Onsite Call Control

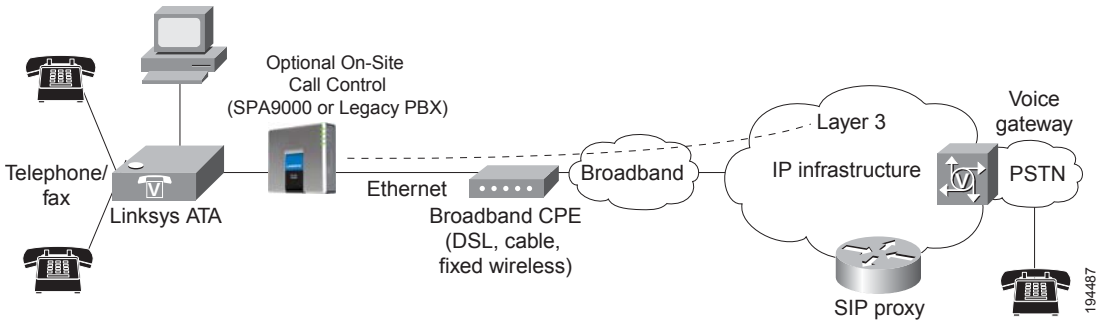

This chapter introduces the functionality of the ATA devices and describes the features that are available.

Refer to the following topics:

- **"Comparison of ATA Devices," on page 17**
- **"ATA Connectivity Requirements," on page 20**
- **"ATA Software Features," on page 26**

Comparison of ATA Devices

Each ATA device is an intelligent low-density Voice over IP (VoIP) gateway that enables carrier-class residential and business IP Telephony services delivered over broadband or high-speed Internet connections. An ATA device maintains the state of each call it terminates and makes the proper reaction to user input events (such as on/off hook or hook flash). The ATA devices use the Session Initiation Protocol (SIP) open standard so there is little or no involvement by a "middle-man" server or media gateway controller. SIP allows interoperation with all ITSPs that support SIP.

The **ATA Models** table summarizes the ports and features provided by the ATA devices described in this document.

ATA Models

Product Name	FXS (Analog Phone)	FXO PSTN	RJ-45 Internet (WAN)	RJ-45 Ethernet (LAN)	Voice Lines	Description
PAP2T	2	—	1	—	2	Voice adapter with two FXS ports.
SPA2102	2	—	1	1	2	Voice adapter with router.
SPA3102	1	1	1	1	1	Voice adapter with router and PSTN connectivity.
SPA8000	8	—	1	Maintenance only	8	Voice adapter with support for up to eight FXS devices. Supports SIP Trunking for inbound call routing to trunk groups. Also has a single multi-port RJ-21 50-pin connector for optional patch-panel connectivity.
SPA8800	4	4	1	Maintenance only	8	Voice adapter with support for up to four FXS phones and up to four FXO PSTN lines. Also has a single multi-port RJ-21 50-pin connector for optional patch-panel connectivity.
WRTP54G	2	—	1	4	2	Wireless-G IP router with two FXS ports. Provides ATA device functionality.

NOTE The information contained in this guide is not a warranty from Cisco. Customers planning to use ATA devices in a VoIP service deployment are advised to test all functionality they plan to support before putting the ATA device in service. By implementing ATA devices with the SIP protocol, intelligent endpoints at the edges of a network perform the bulk of the call processing. This allows the deployment of a large network with thousands of subscribers without complicated, expensive servers.

The following figure illustrates how the different ATA devices provide voice connectivity in a VoIP network.

Figure 3 How ATAs Provide Voice Connectivity

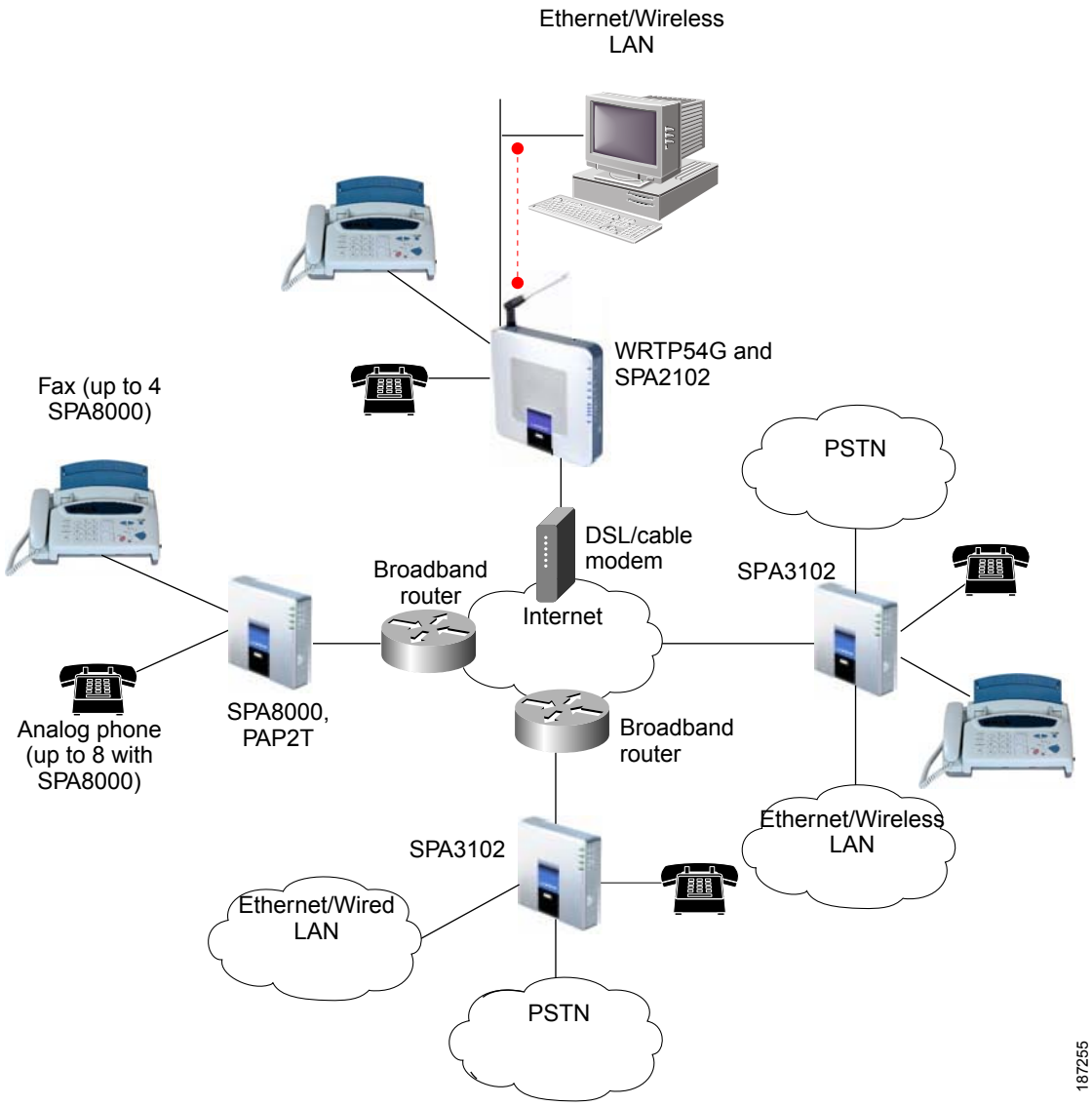

- The PAP2T and the SPA8000 provide FXS ports to connect fax machines and analog phones to IP telephone services.
- The SPA3102 and the SPA8800 act as SIP-PSTN gateways.
- The WRTP54G router provides ports for analog telephone devices and provides QoS in the form of priority packet queueing.

NOTE SPA112, SPA122, and WRP400: www.cisco.com/en/US/products/ps10024/prod_maintenance_guides_list.html

ATA Connectivity Requirements

An ATA device can be connected to a local router, or directly to the Internet. Each phone connected to an RJ-11 (analog) port on the ATA device connects to other devices through SIP, which is transmitted over the IP network.

In order to ensure connectivity between the devices connected to its FXS ports, the ATA device requires the following functionality to be supplied on the network connected to its Ethernet port:

- Connection to an IP router with hairpinning support
- Connection to an outbound Proxy server

When a phone connected to the ATA device communicates with another phone, it sends a SIP packet onto the internal LAN. The packet is then forwarded to the external LAN or directly to the Internet. The source address and source port on the original packet are assigned by the ATA device DHCP server. The address and port are translated by the ATA device using Network Address Translation (NAT) and Port Address Translation (PAT). The packet is then routed back to the internal network on the ATA device by the local router or the ISP router.

Problems can occur with calls between phones connected to the ATA device when an outbound proxy or a router with hairpinning support is not available. The ATA device cannot directly connect the two telephone devices, but requires a local or remote router to route the packet back to its destination on the local network from which it originated.

The necessary routing can be provided by a router with hairpinning support, or by an outbound SIP proxy, which is typically provided by the Internet Telephony Service Provider (ITSP). When relying on the ITSP for interconnecting phones on the ATA device, local phones connected to the ATA device are unable to communicate with each other if the Internet connection is not available for any reason. It is recommended you connect the ATA device to a local router that provides hairpinning support to prevent this problem.

PAP2T Connectivity

As shown in the following figure, the PAP2T has two FXS ports (voice lines 1 and 2).

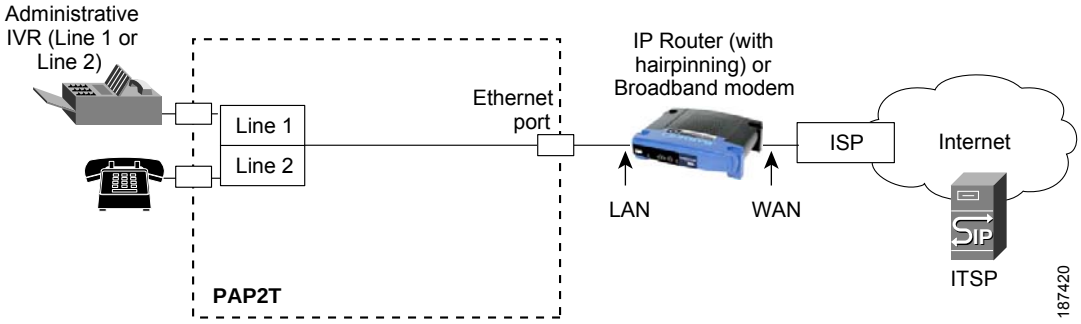

NOTE

- The IVR functions are accessed by connecting an analog telephone to Line 1.
- For proper operation, the service provider should use an Outbound Proxy to forward all voice traffic when the PAP2T is located behind a router. If necessary, explicit port ranges can be specified for SIP and RTP.

SPA2102 Connectivity

As shown in the following illustration, the SPA2102 has two FXS ports (voice lines 1 and 2).

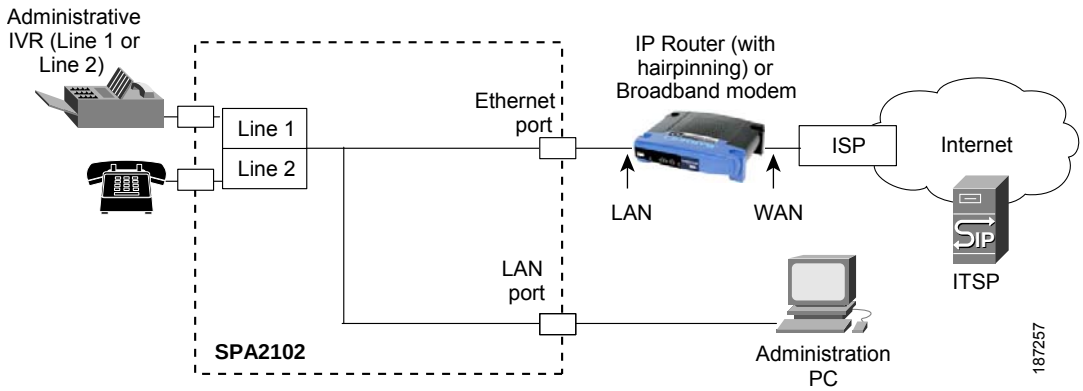

By default, the device attached to the LAN port is assigned the network address 192.168.0.0 with a subnet mask of 255.255.255.0. If there is a network address conflict with a device on the Ethernet port, the network address of the device on the LAN port is automatically changed to 192.168.1.0.

NOTE

- The IVR functions are accessed by connecting an analog telephone to Line 1.
- For proper operation, the service provider should use an Outbound Proxy to forward all voice traffic when the SPA2102 is located behind a router. If necessary, explicit port ranges can be specified for SIP and RTP.

SPA3102 Connectivity

As shown in the following figure, the SPA3102 has one FXS port (voice line 1).

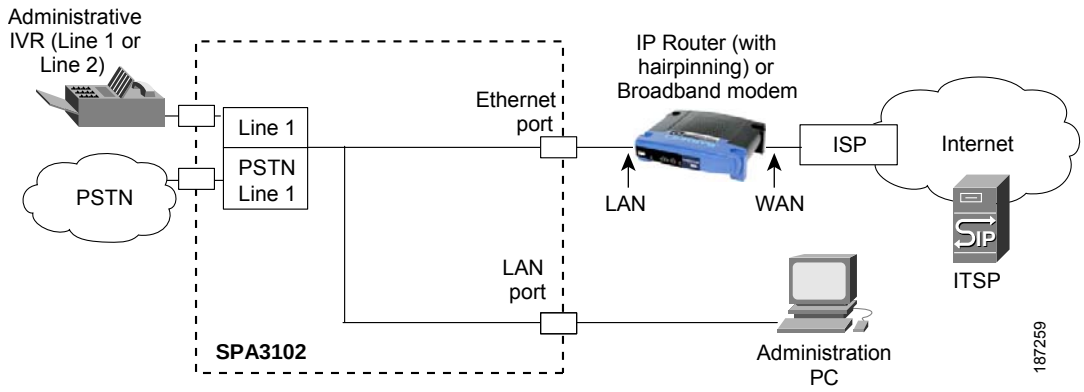

By default, the device on the LAN port is assigned the network address 192.168.0.0 with a subnet mask of 255.255.255.0. If there is a network address conflict with a device on the Ethernet port, the network address of the device on the LAN port is automatically changed to 192.168.1.0.

NOTE

- The IVR functions are accessed by connecting an analog telephone to Line 1.
- For proper operation, the service provider should use an Outbound Proxy to forward all voice traffic when the SPA3102 is located behind a router. If necessary, explicit port ranges can be specified for SIP and RTP.

SPA8000 Connectivity

As shown in the following illustration, the SPA8000 consists of eight voice ports (voice lines 1-8).

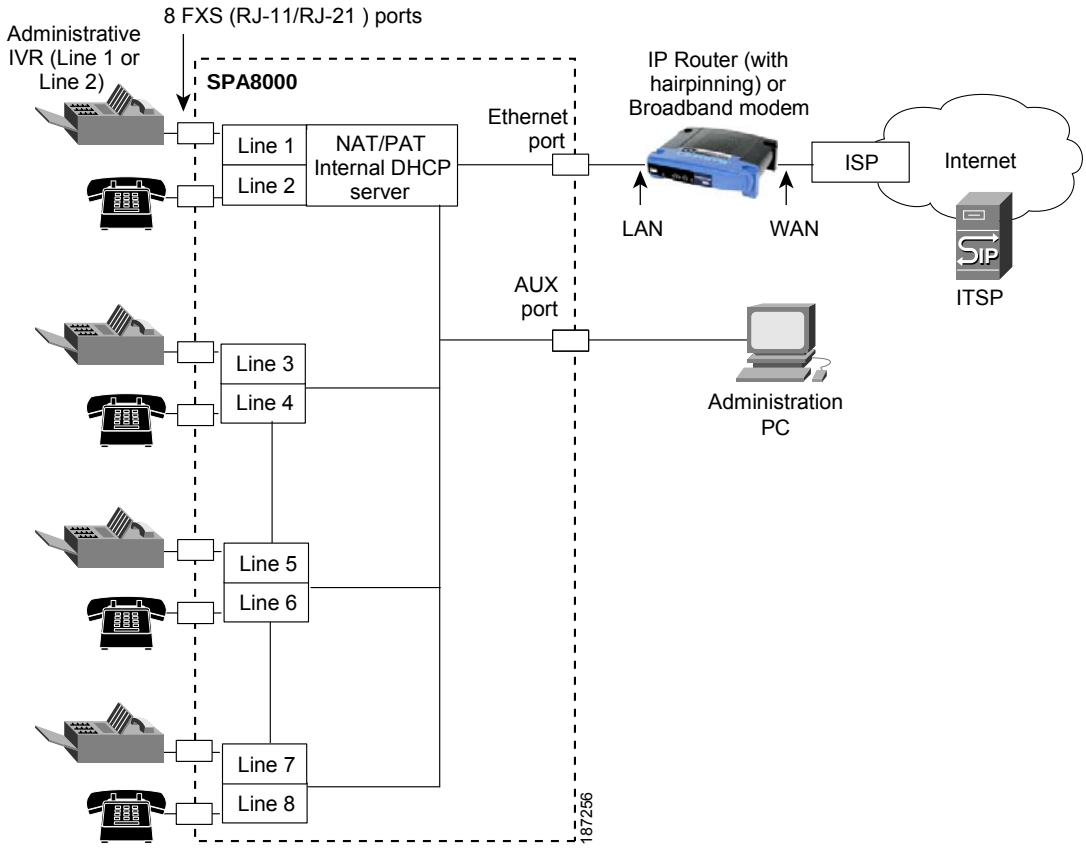

By default, the device on the AUX port is assigned the network address 192.168.0.0 with a subnet mask of 255.255.255.0. If there is a network address conflict with a device on the Ethernet port, the network address of the device on the AUX port is automatically changed to 192.168.1.0.

In the illustration, one fax machine is connected to each pair of ports to illustrate that only one T.38 connection is supported by each of the four pairs of RJ-11 ports. Up to four fax machines can be connected to the SPA8000 router, but they must be distributed as shown.

NOTE

- You can use line 1 or line 2 to access the IVR functions.
- For proper operation, the service provider should use an Outbound Proxy to forward all voice traffic when the SPA8000 is located behind a router. If necessary, explicit port ranges can be specified for SIP and RTP.
- The SPA8000 is not designed to forward IP packets to devices connected to its AUX port and that configuration is not supported.
- The SPA8000 also can be configured with trunk groups and trunk lines. See **"SIP Trunking and Hunt Groups on the SPA8000," on page 75**.

SPA8800 Connectivity

As shown in the following figure, the SPA8800 has four voice modules that each provide 1 FXS port and 1 FXO port.

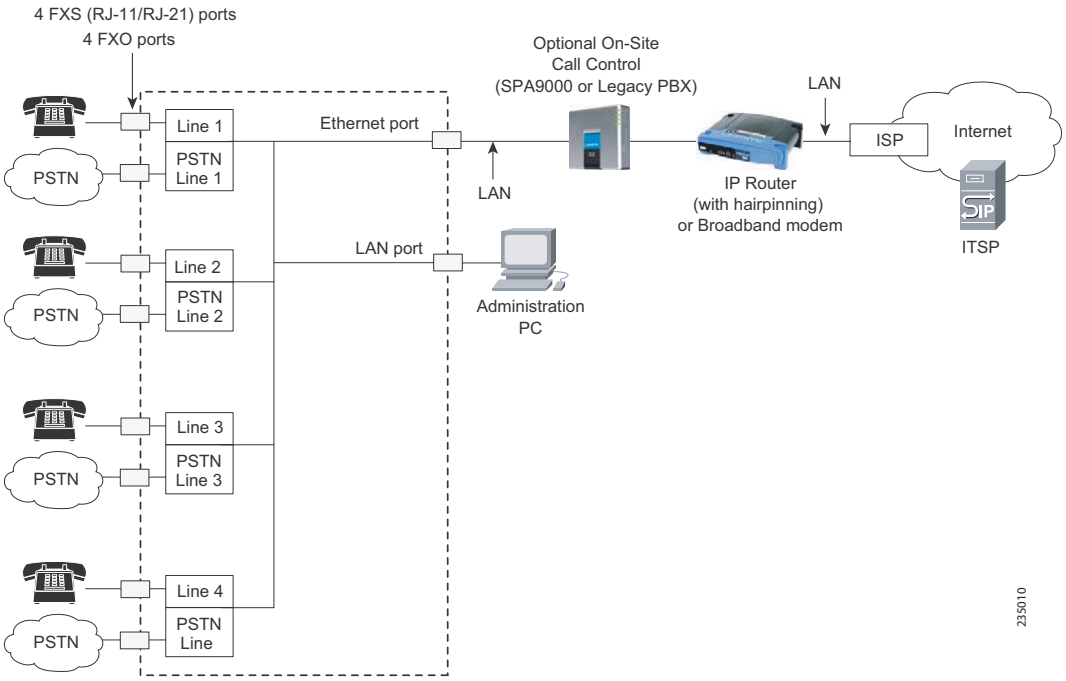

By default, the device on the LAN port is assigned the network address 192.168.0.0 with a subnet mask of 255.255.255.0. If there is a network address conflict with a device on the Ethernet port, the network address of the device on the LAN port is automatically changed to 192.168.1.0.

NOTE

- The IVR functions are accessed by connecting an analog telephone to Phone 1 only.
- For proper operation, the service provider should use an Outbound Proxy to forward all voice traffic when the SPA8800 is located behind a router. If necessary, explicit port ranges can be specified for SIP and RTP.

ATA Software Features

The ATA device is a full featured, fully programmable phone adapter that can be custom provisioned within a wide range of configuration parameters. This section contains a high-level overview of features to provide a basic understanding of the feature breadth and capabilities of the ATA device.

The following sections describe the factors that contribute to voice quality:

- **"Voice Supported Codecs," on page 26**
- **"SIP Proxy Redundancy," on page 28**
- **"Other ATA Software Features," on page 28**

Voice Supported Codecs

Negotiation of the optimal voice codec sometimes depends on the ability of the ATA device to match a codec name with the codec used by the far-end device. The ATA device allows the network administrator to individually name the various codecs that are supported so that the ATA device can successfully negotiate the codec with the far-end equipment. The administrator can select which low-bit-rate codec is to be used for each line. G.711a and G.711u are always enabled.

You can configure your preferred codec in Configuration Utility. See **"SDP Payload Types section," on page 134** and **"Audio Configuration section," on page 174**. See also **"Supported Codecs," on page 54** for a list of which codecs are supported on each ATA device.

Codec (Voice Compression Algorithm)	Description
G.711 (A-law and mμ-law)	This very low complexity codec supports uncompressed 64 kbps digitized voice transmission at one through ten 5 ms voice frames per packet. This codec provides the highest voice quality and uses the most bandwidth of any of the available codecs.
G.726	This low complexity codec supports compressed 16, 24, 32, and 40 kbps digitized voice transmission at one through ten 10 ms voice frames per packet. This codec provides high voice quality.
G.729a	The ITU G.729 voice coding algorithm is used to compress digitized speech. Cisco supports G.729. G.729a is a reduced complexity version of G.729. It requires about half the processing power to code G.729. The G.729 and G.729a bit streams are compatible and interoperable, but not identical.
G.723.1	The ATA device supports the use of ITU G.723.1 audio codec at 6.4 kbps. Up to two channels of G.723.1 can be used simultaneously. For example, Line 1 and Line 2 can be using G.723.1 simultaneously, or Line 1 or Line 2 can initiate a three-way conference with both call legs using G.723.1.

NOTE When no static payload value is assigned per RFC 1890, the ATA device can support dynamic payloads for G.726.

SIP Proxy Redundancy

In typical commercial IP Telephony deployments, all calls are established through a SIP proxy server. An average SIP proxy server may handle thousands of subscribers. It is important that a backup server be available so that an active server can be temporarily switched out for maintenance. The ATA device supports the use of backup SIP proxy servers (via DNS SRV) so that service disruption should be nearly eliminated.

A relatively simple way to support proxy redundancy is to configure your DNS server with a list of SIP proxy addresses. The ATA device can be instructed to contact a SIP proxy server in a domain named in the SIP message. The ATA device consults the DNS server to get a list of hosts in the given domain that provides SIP services. If an entry exists, the DNS server returns an SRV record that contains a list of SIP proxy servers for the domain, with their host names, priority, listening ports, and so on. The ATA device tries to contact the list of hosts in the order of their stated priority.

If the ATA device is currently using a lower priority proxy server, it periodically probes the higher priority proxy to see whether it is back on line, and switches back to the higher priority proxy when possible. SIP Proxy Redundancy is configured in the Line and PSTN Line tabs in the Administration Web Server. See **"ATA Routing Field Reference," on page 105**.

Other ATA Software Features

The following table summarizes other features provided by ATA devices.

Feature	Description
Streaming Audio Server	See **"Configuring a Streaming Audio Server," on page 88**.
T.38 Fax Relay	See **"Using a FAX Machine," on page 55**.
Silence Suppression	See **"Silence Suppression and Comfort Noise Generation," on page 60**.

Feature	Description
Modem and Fax Pass-Through	▪ Modem pass-through mode can be triggered only by predialing the number set in the *Modem Line Toggle Code.* (Set in the Regional tab.) ▪ FAX pass-through mode is triggered by a CED/CNG tone or an NSE event. ▪ Echo canceller is automatically disabled for Modem pass-through mode. ▪ Echo canceller is disabled for FAX pass-through if the parameter *FAX Disable ECAN* (Line 1 or 2 tab) is set to "yes" for that line (in that case FAX pass-through is the same as Modem pass-through). ▪ Call waiting and silence suppression is automatically disabled for both FAX and Modem pass-through. In addition, out-of-band DTMF Tx is disabled during modem or fax pass-through.
Adaptive Jitter Buffer	The ATA device can buffer incoming voice packets to minimize out-of-order packet arrival. This process is known as jitter buffering. The jitter buffer size proactively adjusts or adapts in size, depending on changing network conditions. The ATA device has a Network Jitter Level control setting for each line of service. The jitter level determines how aggressively the ATA device tries to shrink the jitter buffer over time to achieve a lower overall delay. If the jitter level is higher, it shrinks more gradually. If jitter level is lower, it shrinks more quickly. Adaptive Jitter Buffer is configured in the Line and PSTN Line tabs. See **"ATA Voice Field Reference," on page 115**.
International Caller ID Delivery	In addition to support of the Bellcore (FSK) and Swedish/Danish (DTMF) methods of Caller ID (CID) delivery, ATAs provide a large subset of ETSI-compliant methods to support international CID equipment. International CID is configured in the Line and PSTN Line tabs. See **"ATA Voice Field Reference," on page 115**.

Feature	Description
Secure Calls	A user (if enabled by service provider or administrator) has the option to make an outbound call secure in the sense that the audio packets in both directions are encrypted. See **"Secure Call Implementation" section on page 71**.
Adjustable Audio Frames Per Packet	This feature allows the user to set the number of audio frames contained in one RTP packet. Packets can be adjusted to contain from 1–10 audio frames. Increasing the number of packets decreases the bandwidth utilized, but it also increases delay and may affect voice quality. See the RTP Packet Size parameter found in the SIP tab in the **"ATA Voice Field Reference," on page 115**.
DTMF	The ATA device may relay DTMF digits as out-of-band events to preserve the fidelity of the digits. This can enhance the reliability of DTMF transmission required by many IVR applications such as dial-up banking and airline information. DTMF is configured in the *DTMF Tx Mode* parameter found in the Line tabs. See the **"ATA Voice Field Reference," on page 115**.
Call Progress Tone Generation	The ATA device has configurable call progress tones. Call progress tones are generated locally on the ATA device so an end user is advised of status (such as ringback). Parameters for each type of tone (for instance a dial tone played back to an end user) may include frequency and amplitude of each component, and cadence information. See the Regional tab in the **"ATA Voice Field Reference," on page 115**.
Call Progress Tone Pass Through	This feature allows the user to hear the call progress tones (such as ringing) that are generated from the far-end network. See the Regional tab in the **"ATA Voice Field Reference," on page 115**.
Echo Cancellation	Impedance mismatch between the telephone and the IP Telephony gateway phone port can lead to near-end echo. The ATA device has a near-end echo canceller that compensates for impedance match. The ATA device also implements an echo suppressor with comfort noise generator (CNG) so that any residual echo is not noticeable. Echo Cancellation is configured in the Regional, Line, and PSTN Line tabs. See **"ATA Voice Field Reference," on page 115**.

Feature	Description
Signaling Hook Flash Event	The ATA device can signal hook flash events to the remote party on a connected call. This feature can be used to provide advanced mid-call services with third-party-call-control. Depending on the features that the service provider offers using third-party-call-control, the following ATA features may be disabled to correctly signal a hook-flash event to the softswitch: ▪ Call Waiting Service (parameter *call waiting serv* set in the Line tab) ▪ Three Way Conference Service (parameter *three-way conf serv* set in the Line tab) ▪ Three Way Call Service (parameter *three-way call serv* set in the Line tab) You can configure the length of time allowed for detection of a hook flash using the Hook Flash Timer parameter on the Regional tab of the administration web server. See **"ATA Voice Field Reference," on page 115**.
Configurable Dial Plan with Interdigit Timers	The ATA device has three configurable interdigit timers: Initial timeout (T)—Signals that the handset is off the hook and that no digit has been pressed yet. Long timeout (L)—Signals the end of a dial string; that is, no more digits are expected. Short timeout (S)—Used between digits; that is after a digit is pressed a short timeout prevents the digit from being recognized a second time. See **"Configuring Dial Plans," on page 61** for more information.
Polarity Control	The ATA device allows the polarity to be set when a call is connected and when a call is disconnected. This feature is required to support some pay phone system and answering machines. Polarity Control is configured in the Line and PSTN Line tabs. See **"ATA Voice Field Reference," on page 115**.

Feature	Description
Calling Party Control	Calling Party Control (CPC) signals to the called party equipment that the calling party has hung up during a connected call by removing the voltage between the tip and ring momentarily. This feature is useful for auto-answer equipment, which then knows when to disengage. CPC is configured in the Regional, Line, and PSTN Line tabs. See **"ATA Voice Field Reference," on page 115**.
Report Generation and Event Logging	The ATA device reports a variety of status and error reports to assist service providers to diagnose problems and evaluate the performance of their services. The information can be queried by an authorized agent, using HTTP with digested authentication, for instance. The information may be organized as an XML page or HTML page. Report Generation and Event Logging are configured in the System, Line, and PSTN Line tabs. See **"ATA Voice Field Reference," on page 115**.
Syslog and Debug Server Records	Syslog and Debug Sever Records log more details than Report Generation and Event Logging. Using the configuration parameters, the ATA device allows you to select which type of activity/events should be logged. Syslog and Debug Server allow the information captured to be sent to a Syslog Server. Syslog and Debug Server Records are configured in the System, Line, and PSTN Line tabs. See **"ATA Voice Field Reference," on page 115**.
SIP Over TCP	To guarantee state-oriented communications, you can choose TCP as the transport protocol for SIP. This protocol is "guaranteed delivery", which assures that lost packets are retransmitted. TCP also guarantees that the SIP packages are received in the same order that they were sent. As a result, TCP overcomes the main disadvantages of UDP. In addition, for security reasons, most corporate firewalls block UDP ports. With TCP, new ports do not need to be opened or packets dropped, because TCP is already in use for basic activities such as Internet browsing or e-commerce. SIP over TCP is configured in the Line tabs. See **"ATA Voice Field Reference," on page 115**. This feature applies to SPA2102, SPA3102, and SPA8800.

Feature	Description
SIP Over TLS	SPA2102, SPA3102, and SPA8800 devices allow the use of SIP over Transport Layer Security (TLS). SIP over TLS is designed to eliminate the possibility of malicious activity by encrypting the SIP messages of the service provider and the end user. SIP over TLS relies on the widely-deployed and standardized TLS protocol. SIP Over TLS encrypts only the signaling messages and not the media. A separate secure protocol such as Secure Real-Time Transport Protocol (SRTP) can be used to encrypt voice packets. SIP over TLS is configured in the SIP Transport parameter configured in the Line tab(s). See **"ATA Voice Field Reference," on page 115**.
Media Loopback	SPA2102, SPA3102, and PAP2T devices allow service providers to use media loopback to quantitatively and qualitatively measure the voice quality experienced by the end user. One device acts as the audio transmitter and receiver while the other device acts as the audio mirror. The audio mirror transmits the audio packets that it receives back to the transmitter/receiver instead of transmitting the data sampled on its local microphone (IP phone) or attached analog telephone (ATA-type device). Media loopback is configured in the User tab. See **"ATA Voice Field Reference," on page 115**.

Feature	Description
Register Retry Enhancements	The Register Retry Enhancements feature for SPA2102, SPA3102, and PAP2T devices adds flexibility to the delay timers that are activated when the SIP REGISTER of a device fails. Once a SIP REGISTER failure response code is sent, a delay timer is selected depending on the type of registration failure response code. The delay timers can be one of the following: ▪ Reg Retry Random Delay—Random delay range (in seconds) to add to the Register Retry Intvl parameter when retrying a SIP REGISTER after a failure. The default is 0, which disables this feature. ▪ Reg Retry Long Random Delay—Random delay range (in seconds) to add to the Register Retry Long Intvl parameter when retrying a SIP REGISTER after a failure. The default is 0, which disables this feature. ▪ Reg Retry Intvl Cap—The maximum value to cap the exponential back-off retry delay. The exponential back-off retry delay starts with the setting found in the Register Retry Intvl parameter and doubles it on every REGISTER retry after a failure. In other words, the retry interval after a failure is always set to the seconds configured in the Register Retry Intvl parameter. If this feature is enabled, the Reg Retry Random Delay setting is added on top of the exponential back-off adjusted delay value. The default value is 0, which disables the exponential back-off feature. Register Retry is configured in the SIP tab. See **"ATA Voice Field Reference," on page 115**.

Feature	Description
DHCP Renewal on Timeout	SPA2102, SPA3102, and PAP2T voice devices typically operate in a network where a DHCP server assigns IP addresses to the devices. Because IP addresses are a limited resource, the DHCP server periodically renews the device lease on the IP address. Therefore, if an ATA device loses its IP address for any reason, or if some other device on the network is assigned its IP address, the communication between the SIP proxy and the device is either severed or degraded. Whenever an expected SIP response is not received within a programmable amount of time after the corresponding SIP command is sent, the DHCP Renewal on Timeout feature automatically causes the device to request a renewal of its IP address. If the DHCP server returns the IP address that it originally assigned to the device, the ATA device is presumed to be operating correctly. If it returns a different address, the ATA device changes its IP address to the new address provided by the DHCP server. The ATA device then resets, and once again sends a SIP register request for the DHCP server to accept.

2

Basic Administration and Configuration

This chapter describes the equipment and services that are required to install your ATA device and explains how to complete the basic administration and configuration tasks.

Refer to the following topics:

- **"Basic Services and Equipment Required" section on page 36**
- **"Downloading Firmware" section on page 37**
- **"Basic Installation and Configuration" section on page 37**
- **"Upgrading the Firmware for the ATA Device" section on page 37**
- **"Setting up Your ATA Device" section on page 38**
- **"Using the Administration Web Server" section on page 39**
- **"Upgrading, Rebooting, and Resyncing Your ATA Device" section on page 43**
- **"Provisioning Your ATA Device" section on page 45**

Basic Services and Equipment Required

To configure your ATA devices, you need the following services and equipment:

- An integrated access device or modem for broadband access to the Internet
- Internet Telephony Service Provider (ITSP) for Voice Over IP Telephone service
- You must have to following information about your account:
  - SIP Proxy (IP address or name)
  - Account information and Password

- Computer with Microsoft Windows XP or Windows Vista (for system configuration)
- Analog phones
- UPS (uninterruptible Power Source) recommended for devices such as the Integrated Access Device, network switch, router, and PoE switch to ensure that your phone system continues to work during a power failure, just like your home phone.

Downloading Firmware

Always download and install the latest firmware for your ATA device before doing any configurations. You can find the latest firmware by going to:

http://www.cisco.com/en/US/products/ps10024/tsd_products_support_series_home.html

and clicking the **Download Software** link.

Basic Installation and Configuration

See your the Quick Installation Guide and the User Guide for the ATA model that you are installing. If you are configuring the complete SPA9000 Voice System, also refer to the documentation for the SPA9000 Voice System.

Upgrading the Firmware for the ATA Device

In this procedure, you install the firmware files that you downloaded previously.

STEP 1 Determine the address of the ATA device:

a. Connect an analog telephone to the Phone 1 or Phone 2 port on the ATA device. (You may not hear a dial tone. Continue to step b.)

b. Press ******** on the keypad to access the IVR menu.

c. Press **110#** to determine the Internet (WAN) IP address.

STEP 2 Make a note of the IP address that is announced.

NOTE If the administration computer is connected to the Ethernet port of the ATA device, the default IP address is 192.168.0.1.

STEP 3 Use the administration computer to install the latest firmware:

a. Extract the Zip file, and then run the executable file to upgrade the firmware.

b. When the *Firmware Upgrade Warning* window appears, click **Continue**.

c. In the next window that appears, enter the IP address of the ATA device, and then click **OK**.

d. In the *Confirm Upgrade* window, verify that the correct device information and product number appear. Then click **Upgrade**.

e. A progress message appears while the upgrade is in progress. The success window appears when the upgrade is completed. The device reboots.

f. Click **OK** to close the confirmation message.

g. To verify the upgrade, point the web browser to the IP address of the ATA device. Check the *Router > Status* page. The *Software Version* field should show the firmware version that you installed.

NOTE You may need to refresh your browser to display the updated page reflecting the new version number.

Setting up Your ATA Device

After installation and basic configuration of your ATA device, you will use the administration web server to finish your configuration.

ATA devices support two levels of administration privileges: Administrator and User. Both privileges can be password protected.

NOTE By default, there are no passwords assigned for either the Administrator account or the User account.

The Administrator account can modify all the web profile parameters and the passwords of both Administrator and User account. The User account can access only part of the web profile parameters. The parameters that the User account can access are specified using the Administrator account on the Provisioning page of the administration web server.

To directly access the Administrator account level privilege, use the following URL:

http://<ipaddress>/admin/voice

If the password has been set for the Administrator account, the browser prompts for authentication. The User account name and the Administrator account name cannot be changed.

When browsing pages with the Administrator account privilege, you can switch to User account privilege by clicking the **User Login** link.

If the User account password is set, the browser prompts for authentication when you click the **User Login** link. From the User account, you can switch to the Administrator account by clicking the **Admin Login** link. Authentication is required if the Administrator account password has been set.

NOTE Switching between User and Administrator accounts or between basic and advanced views discards any uncommitted changes on the web pages.

Using the Administration Web Server

This section describes how to use the administration web server to configure the advanced settings of the ATA device. It includes the following topics:

- **"Connecting to the Administration Web Server" section on page 40**
- **"Setting Up the WAN Configuration for Your ATA Device" section on page 40**
- **"Registering to the Service Provider" section on page 42**

- **"Advanced Configurations" section on page 43**

Connecting to the Administration Web Server

To access the ATA administration web server, perform the following steps.

STEP 1 Start Internet Explorer on a computer that is connected to the same network as the ATA device.

STEP 2 Determine the address of the ATA device.

a. Connect an analog telephone to the Phone 1 port of the ATA device. (You may not hear a dial tone. Continue to step b.)

b. Press ******** on the keypad to access the IVR menu.

c. Press **110#** to determine the Internet (WAN) IP address.

NOTE For more information on the IVR menu, see your Quick Installation Guide or User Guide for your device, or the *LVS Administration Guide*.

STEP 3 Direct the browser to the IP address of the ATA device.

STEP 4 The *Router > Status* page appears. By default, the page is in Basic User mode. Log on to the administrator view by clicking **Admin Login**, near the top right corner of the page. Then click **Advanced**.

NOTE By default, no password is required. You can assign an administrative password later, but it is convenient not to use a password during the initial configuration.

Setting Up the WAN Configuration for Your ATA Device

STEP 1 Start Internet Explorer, connect to the administration web server, and choose Admin access with Advanced settings.

STEP 2 Click **Network tab > WAN Setup**.

STEP 3 Complete the WAN configuration for DHCP, static IP addressing, or PPPoE.

For DHCP:

a. Select **DHCP** from the *Connection Type* drop-down menu.

b. If you use a cable modem, you may need to configure the MAC Clone Settings. (Contact your ISP for more information.)

c. If your service uses a specific PC MAC address, then select **yes** from the *Enable MAC Clone Service* setting.

d. Then enter the PC's MAC address in the *Cloned MAC Address* field.

For Static IP Addressing:

a. Select **Static IP** from the *Connection Type* drop-down menu.

b. In the *Static IP Settings* section, enter the IP address in the *Static IP* field, the subnet mask in the *NetMask* field, and the default gateway IP address in the *Gateway* field.

c. In the *Optional Settings* section, enter the DNS server address(es) in the *Primary DNS* and optional *Secondary DNS* fields.

For PPPoE:

a. Select **PPPoE** from the *Connection Type* drop-down menu. This is the correct setting for most DSL users.

b. Enter the values provided by the ITSP in the following fields:

- PPPoE Login Name
- PPPoE Login Password
- PPPoE Service Name

STEP 4 Click **Submit All Changes**. The ATA device reboots.

STEP 5 To verify your progress, click the **Router** tab and then click **Status**. Under *System Status*, confirm the *WAN Connection Type*, *Current IP*, *Current Netmask*, *Current Gateway*, and *Primary DNS*.

Registering to the Service Provider

To use VoIP phone service, you must configure your ATA device to the Service Provider.

STEP 1 Start Internet Explorer, connect to the administration web server, and choose Admin access with Advanced settings.

STEP 2 Click **Voice tab > Line *N***, where ***N*** is the line number that you want to configure.

STEP 3 Enter the account information for your ITSP. The following is the minimum required configuration to connect the ATA device to an ITSP:

- User ID: The account number or logon name for your ITSP account (Subscriber Information section)
- Password: The password for your ITSP account (Subscriber Information section)
- Proxy: The proxy server for your ITSP account (Proxy and Registration section)

STEP 4 After making any necessary changes, click the **Submit All Changes** button.

STEP 5 To verify your progress, perform the following tasks:

- After the devices reboot, click **Voice tab > Info**. Scroll down to the *Line 1 Status* section of the page. Verify that the line is registered.
- Use an external phone to place an inbound call to the telephone number that was assigned by your ITSP. Assuming that you have left the default settings in place, the phone should ring and you can pick up the phone to get two-way audio.
- If the line is not registered, you may need to refresh the browser several times because it can take a few seconds for the registration to succeed. Also verify that your DNS is configured properly.

NOTE If the device has more than one *Line* tab, each line tab must be configured separately. Each line tab can be configured for a different ITSP.

Advanced Configurations

Other parameters may need to be changed from the defaults, depending on the requirements of a specific ITSP. Some of the commonly configured parameters include the following:

- Streaming Audio Server—You can enable an external music source for music on hold. See the **"Configuring a Streaming Audio Server," on page 88** for further information.
- NAT Settings—You can adjust these settings to resolve issues that arise when using a ATA on a network behind a Network Address Translation (NAT) device. See the **"Network Address Translation (NAT) and Voice over IP (VoIP)," on page 47** for further information.
- Subscriber Information—You can configure security parameters. See the **"Secure Call Implementation," on page 71** for further information.
- Dial Plan—You can configure a dial plan for a specific line. See the **"Configuring Dial Plans," on page 61** for further information.

Upgrading, Rebooting, and Resyncing Your ATA Device

The administration web server supports upgrading, rebooting, and resyncing functions through special URLs. Administrator account privilege is needed for these functions.

Upgrade URL

The Upgrade URL lets you upgrade the ATA device to the firmware specified by the URL, which can identify either a TFTP or HTTP server.

NOTE If the value of the *Upgrade Enable* parameter in the Provisioning page is **No**, you cannot upgrade the ATA device even if the web page indicates otherwise.

The syntax of the Upgrade URL is as follows:

```
http://spa-ip-addr/admin/upgrade?[protocol://][server-name[:port]][/
firmware-pathname]
```

Both HTTP and TFTP are supported for the upgrade operation.

If no *protocol* is specified, TFTP is assumed. If no *server-name* is specified, the host that requests the URL is used as *server-name*.

If no port specified, the default port of the protocol is used. (69 for TFTP or 80 for HTTP)

The *firmware-pathname* is typically the file name of the binary located in a directory on the TFTP or HTTP server. If no *firmware-pathname* is specified, */spa.bin* is assumed, as in the following example:

```
http://192.168.2.217/admin/upgrade?tftp://192.168.2.251/spa.bin
```

Resync URL

The Resync URL lets you force the ATA device to do a resync to a profile specified in the URL, which can identify either a TFTP, HTTP, or HTTPS server. The syntax of the Resync URL is as follows:

```
http://spa-ip-addr/admin/resync?[[protocol://][server-name[:port]]/profile-
pathname]
```

NOTE The SPA resyncs only when it is idle.

If no parameter follows */resync?,* the Profile Rule setting from the Provisioning page is used.

If no *protocol* is specified, TFTP is assumed. If no *server-name* is specified, the host that requests the URL is used as *server-name*.

If no port is specified, the default port is used (69 for TFTP, 80 for HTTP, and 443 for HTTPS).

The profile-path is the path to the new profile with which to resync, for example:

```
http://192.168.2.217admin/resync?tftp://192.168.2.251/spaconf.cfg
```

Reboot URL

The Reboot URL lets you reboot the ATA device. The Reboot URL is as follows:

```
http://spa-ip-addr/admin/reboot
```

NOTE The ATA device reboots only when it is idle.

Provisioning Your ATA Device

This section describes the provisioning functionality of the ATA device. This section includes the following topics:

- **"Provisioning Capabilities" section on page 45**
- **"Configuration Profile" section on page 46**

For detailed information about provisioning your ATA device, refer to the *SPA Provisioning Guide.*

Provisioning Capabilities

The ATA device provides for secure provisioning and remote upgrade. Provisioning is achieved through configuration profiles transferred to the device via TFTP, HTTP, or HTTPS. To configure Provisioning, go to Provisioning tab in the administration web server.

The ATA device can be configured to automatically resync its internal configuration state to a remote profile periodically and on power up. The automatic resyncs are controlled by configuring the desired profile URL into the device.

The ATA device accepts profiles in XML format, or alternatively in a proprietary binary format, which is generated by a profile compiler tool available from Cisco. Find the Profiler Compiler for your ATA at http://www.cisco.com/web/partners/sell/smb/products/voice_and_conferencing.html#~vc_technical_resources.

The ATA device supports up to 256-bit symmetric key encryption of profiles. For the initial transfer of the profile encryption key (initial provisioning stage), the ATA device can receive a profile from an encrypted channel (HTTPS), or it can resync to a binary profile generated by the Cisco-supplied profile compiler. In the latter case, the profile compiler can encrypt the profile specifically for the target ATA device, without requiring an explicit key exchange.

Remote firmware upgrade is achieved via TFTP or HTTP (firmware upgrades using HTTPS are not supported). Remote upgrades are controlled by configuring the desired firmware image URL into the ATA device via a remote profile resync.

For further information about remote provisioning refer to the *SPA Provisioning Guide*.

Configuration Profile

The ATA configuration profile can be either an XML file or a binary file with a proprietary format.

The XML file consists of a series of elements (one per configuration parameter), encapsulated within the element tags <flat-profile> ... </flat-profile>. The encapsulated elements specify values for individual parameters. Here is an example of a valid XML profile:

```
<flat-profile>
<Admin_Passwd>some secret</Admin_Passwd>
<Upgrade_Enable>Yes</Upgrade_Enable>
</flat-profile>
```

Binary format profiles contain ATA parameter values and user access permissions for the parameters. By convention, the profile uses the extension .cfg (for example, spa2102.cfg). The Profile Compiler (SPC) tool compiles a plain-text file containing parameter-value pairs into a properly formatted and encrypted .cfg file. The SPC tool is available for the Win32 environment and Linux-i386-elf environment. Requests for SPC tools compiled on other platforms are evaluated on a case-by-case basis. Please contact your sales representative for further information about obtaining the SPC tool.

The syntax of the plain-text file accepted by the profile compiler is a series of parameter-value pairs, with the value in double quotes. Each parameter-value pair is followed by a semicolon. Here is an example of a valid text source profile for input to the SPC tool:

```
Admin_Passwd  “some secret”;
Upgrade_Enable “Yes”;
```

Refer to the *SPA Provisioning Guide* for further details.

The names of parameters in XML profiles can generally be inferred from the ATA configuration Web pages, by substituting underscores (_) for spaces and other control characters. Further, to distinguish between Lines 1, 2, 3, and 4, corresponding parameter names are augmented by the strings _1_, _2_, _3_, and _4_. For example, Line 1 Proxy is named Proxy_1_ in XML profiles.

Parameters in the case of source text files for the SPC tool are similarly named, except that to differentiate Line 1, 2, 3, and 4, the appended strings ([1], [2], [3], or [4]) are used. For example, the Line 1 Proxy is named Proxy[1] in source text profiles for input to the SPC.

3

Configuring Your System for ITSP Interoperability

This chapter provides configuration details to help you to ensure that your infrastructure properly supports voice services.

- **"Network Address Translation (NAT) and Voice over IP (VoIP)," on page 47**
- **"Firewalls and SIP," on page 53**
- **"Configuring SIP Timer Values," on page 53**

Network Address Translation (NAT) and Voice over IP (VoIP)

NAT is a function that allows multiple devices to share the same public, routable, IP address to establish connections over the Internet. NAT is present in many broadband access devices to translate public and private IP addresses. To enable VoIP to co-exist with NAT, some form of NAT traversal is required.

Some ITSPs provide NAT traversal, but some do not. If your ITSP does not provide NAT traversal, you have several options.

- **"NAT Mapping with Session Border Controller," on page 48**
- **"NAT Mapping with SIP-ALG Router," on page 48**
- **"Configuring NAT Mapping with a Static IP Address," on page 48**
- **"Configuring NAT Mapping with STUN," on page 50**

NAT Mapping with Session Border Controller

It is strongly recommended that you choose an ITSP that supports NAT mapping through a Session Border Controller. With NAT mapping provided by the ITSP, you have more choices in selecting a router.

NAT Mapping with SIP-ALG Router

If the ITSP network does not provide a Session Border Controller functionality, you can achieve NAT mapping by using a router that has a SIP ALG (Application Layer Gateway). The WRV200 router is recommended for this purpose, although any router with a SIP-ALG can be used. By using a SIP-ALG router, you have more choices in selecting an ITSP.

Configuring NAT Mapping with a Static IP Address

If the ITSP network does not provide a Session Border Controller functionality, and if other requirements are met, you can configure NAT mapping to ensure interoperability with the ITSP.

Requirements:

- You must have an external (public) IP address that is static.
- The NAT mechanism used in the router must be symmetric. See **"Determining the Router's NAT Mechanism," on page 52**.
- The LAN switch must be configured to enable Spanning Tree Protocol and Port Fast on the ports to which the SPA devices are connected.

NOTE Use NAT mapping only if the ITSP network does not provide a Session Border Controller functionality.

STEP 1 Connect to the administration web server, and choose Admin access with Advanced settings.

STEP 2 Click **Voice tab > SIP**.

STEP 3 Scroll down to the *NAT Support Parameters* section, and then enter the following settings to support static mapping to your public IP address:

- **Handle VIA received, Insert VIA received, Substitute VIA Addr:** yes
- **Handle VIA rport, Insert VIA rport, Send Resp To Src Port:** yes
- **EXT IP:** Enter the public IP address for your router.

Voice tab > SIP: NAT Support Parameters

NAT Support Parameters			
Handle VIA received:	yes	Handle VIA rport:	yes
Insert VIA received:	yes	Insert VIA rport:	yes
Substitute VIA Addr:	yes	Send Resp To Src Port:	yes
STUN Enable:	no	STUN Test Enable:	no
STUN Server:		EXT IP:	xxx.xxx.xxx.xxx
EXT RTP Port Min:		NAT Keep Alive Intvl:	15

STEP 4 Click **Voice tab > Line *N***, where *N* represents the line interface number.

STEP 5 Scroll down to the *NAT Settings* section.

- **NAT Mapping Enable:** Choose **YES**.
- **NAT Keep Alive Enable:** Choose **YES** (optional).

Voice tab > Line N > NAT Settings

NAT Settings			
NAT Mapping Enable:	yes	NAT Keep Alive Enable:	yes
NAT Keep Alive Msg:	$NOTIFY	NAT Keep Alive Dest:	$PROXY

STEP 6 Click **Submit All Changes**.

NOTE You also need to configure the firewall settings on your router to allow SIP traffic. See **"Firewalls and SIP," on page 53**.

Configuring NAT Mapping with STUN

If the ITSP network does not provide a Session Border Controller functionality, and if other requirements are met, it is possible to use STUN as a mechanism to discover the NAT mapping. This option is considered a practice of last resort and should be used only if the other methods are unavailable.

Requirements:

- STUN is a viable option only if your router uses asymmetric NAT. See **"Determining the Router's NAT Mechanism," on page 52**.
- You must have a computer running STUN server software.
- The LAN switch must be configured to enable Spanning Tree Protocol and Port Fast on the ports to which the SPA devices are connected.

NOTE Use NAT mapping only if the ITSP network does not provide a Session Border Controller functionality.

STEP 1 Connect to the administration web server, and choose Admin access with Advanced settings.

STEP 2 Click **Voice tab > SIP**.

STEP 3 Scroll down to the *NAT Support Parameters* section, and then enter the following settings to enable and support the STUN server settings:

- **Handle VIA received:** yes
- **Handle VIA rport:** yes
- **Insert VIA received:** yes
- **Insert VIA rport:** yes
- **Substitute VIA Addr:** yes
- **Send Resp To Src Port:** yes
- **STUN Enable**: Choose **yes**.
- **STUN Server:** Enter the IP address for your STUN server.

Voice tab > SIP > NAT Support Parameters

NAT Support Parameters			
Handle VIA received:	yes	Handle VIA rport:	yes
Insert VIA received:	yes	Insert VIA rport:	yes
Substitute VIA Addr:	yes	Send Resp To Src Port:	yes
STUN Enable:	yes	STUN Test Enable:	no
STUN Server:	xxx.xxx.xxx.xxx	EXT IP:	
EXT RTP Port Min:		NAT Keep Alive Intvl:	15

STEP 4 Click **Voice tab > Line *N***, where N is the number of the line interface.

STEP 5 Scroll down to the *NAT Settings* section.

- **NAT Mapping Enable:** Choose **yes**.
- **NAT Keep Alive Enable:** Choose **yes** (optional).

Voice tab > Line N > NAT Settings

NAT Settings			
NAT Mapping Enable:	yes	NAT Keep Alive Enable:	yes
NAT Keep Alive Msg:	$NOTIFY	NAT Keep Alive Dest:	$PROXY

NOTE Your ITSP may require the SPA device to send NAT keep alive messages to keep the NAT ports open permanently. Check with your ITSP to determine the requirements.

STEP 6 Click **Submit All Changes**.

NOTE You also need to configure the firewall settings on your router to allow SIP traffic. See **"Firewalls and SIP," on page 53**.

Determining the Router's NAT Mechanism

STUN does not work on routers with symmetric NAT. With symmetric NAT, IP addresses are mapped from one internal IP address and port to one external, routable destination IP address and port. If another packet is sent from the same source IP address and port to a different destination, then a different IP address and port number combination is used. This method is restrictive because an external host can send a packet to a particular port on the internal host *only if* the internal host first sent a packet from that port to the external host.

NOTE This procedure assumes that a syslog server is configured and is ready to receive syslog messages.

STEP 1 Make sure you do not have firewall running on your PC that could block the syslog port (port 514 by default).

STEP 2 Connect to the administration web server, and choose Admin access with Advanced settings.

STEP 3 To enable debugging, complete the following tasks:

a. Click **Voice tab > System**.

b. In the *Debug Server* field, enter the IP address of your syslog server. This address and port number must be reachable from the SPA9000.

c. From the *Debug level* drop-down list, choose **3**.

STEP 4 To collect information about the type of NAT your router is using, complete the following tasks:

a. Click **Voice tab > SIP**.

b. Scroll down to the *NAT Support Parameters* section.

c. From the *STUN Test Enable* field, choose **yes**.

STEP 5 To enable SIP signalling, complete the following task:

a. Click **Voice tab > Line *N***, where *N* represents the line interface number.

b. In the *SIP Settings* section, choose **full** from the *SIP Debug Option* field.

STEP 6 Click **Submit All Changes**.

STEP 7 View the syslog messages to determine whether your network uses symmetric NAT. Look for a warning header in the REGISTER messages, such as Warning: 399 spa "Full Cone NAT Detected."

Firewalls and SIP

To enable SIP requests and responses to be exchanged with the SIP proxy at the ITSP, you must ensure that your firewall allows both SIP and RTP unimpeded access to the Internet.

- Make sure that the following ports are not blocked:
  - SIP ports—UDP port 5060 through 5063, which are used for the ITSP line interfaces
  - RTP ports—16384 to 16482
- Also disable SPI (Stateful Packet Inspection) if this function exists on your firewall.

Configuring SIP Timer Values

The default timer values should be adequate in most circumstances. However, you can adjust the SIP timer values as needed to ensure interoperability with your ISTP. For example, if SIP requests are returned with an “invalid certificate” message, you may need to enter a longer SIP T1 retry value.

To view the default settings or to make changes, open the *Voice > SIP* page, and scroll down to the *SIP Timer Values* section. For field descriptions, see **”SIP Timer Values (sec) section,” on page 129 of Appendix B**.

4

Configuring Voice Services

This chapter describes how to configure your ATA device to meet the customer's requirements for voice services.

- "Supported Codecs," on page 54
- "Using a FAX Machine," on page 55
- "Managing Caller ID Service," on page 58
- "Silence Suppression and Comfort Noise Generation," on page 60
- "Configuring Dial Plans," on page 61
- "Secure Call Implementation," on page 71
- "SIP Trunking and Hunt Groups on the SPA8000," on page 75

Supported Codecs

The following list shows the current supported codecs for each ATA device. If you need to change the G711u codec which is configured by default, set your preferred codecs in the FXS Line tab(s); Audio Configuration. You may set your first, second, and third preferred codec. See "ATA Routing Field Reference," on page 105.

PAP2T / SPA2102 / SPA3102 / SPA8000 / SPA8800

- G.711u (configured by default)
- G.711a
- G.726-16
- G.726-24
- G.726-32

- G.726-40
- G.729a
- G.723

WRTP54G

- G.711u (configured by default)
- G.711a
- G.726-32
- G.729a
- G.723

Using a FAX Machine

You can connect a fax machine to an FXS port on the SPA2102, SPA3102, SPA8000, and SPA8800. T.38 Fax is supported on these devices, for fax transmission over an IP network. The SPA2102 and SPA3102 support a single connection, while the SPA8000 and SPA8800 support one connection for each pair of FXS ports (1/2, 3/4, 5/6, and 7/8) for a maximum of four connections.

Follow this procedure to optimize fax completion rates.

STEP 1 Upgrade the ATA firmware to the latest version

STEP 2 Ensure that you have enough bandwidth for uplink and downlink.

- For G.711 fallback, it is recommend to have approximately 100Kbps.
- For T.38, allocate at least 50 kbps.

STEP 3 To optimize G.711 fallback fax completion rates, set the following on the Line tab of your ATA device:

- **Network Jitter Buffer**: very high
- **Jitter buffer adjustment**: disable
- **Call Waiting**: no
- **3 Way Calling**: no

- **Echo Canceller**: no
- **Silence suppression**: no
- **Preferred Codec**: G.711
- **Use pref. codec only**: yes

STEP 4 If you are using a Cisco media gateway for PSTN termination, disable T.38 (fax relay) and enable fax using modem passthrough.

For example:

```
modem passthrough nse payload-type 110 codec g711ulaw
fax rate disable
fax protocol pass-through g711ulaw
```

STEP 5 Enable T.38 fax on the SPA 2102 by configuring the following parameter on the Line tab for the FXS port to which the FAX machine is connected:

```
FAX_Passthru_Method: ReINVITE
```

NOTE If a T.38 call cannot be set-up, then the call should automatically revert to G.711 fallback.

STEP 6 If you are using a Cisco media gateway use the following settings:

Make sure the Cisco gateway is correctly configured for T.38 with the SPA dial peer. For example:

```
fax protocol T38
fax rate voice
fax-relay ecm disable
fax nsf 000000
no vad
```

Fax Troubleshooting

If have problems sending or receiving faxes, complete the following steps:

STEP 1 Verify that your fax machine is set to a speed between 7200 and 14400.

STEP 2 Send a test fax in a controlled environment between two ATAs.

STEP 3 Determine the success rate.

STEP 4 Monitor the network and record the following statistics:

- Jitter
- Loss
- Delay

STEP 5 If faxes fail consistently, capture a copy of the web interface settings by selecting **Save As** > **Web page, complete** from the administration web server page. You can send this configuration file to Technical Support.

STEP 6 Enable and capture the debug log. For instructions, refer to **Appendix C, "Troubleshooting."**.

NOTE You may also capture data using a sniffer trace.

STEP 7 Identify the type of fax machine connected to the ATA device.

STEP 8 Contact technical support:

- If you are an end user of VoIP products, contact the reseller or Internet telephony service provider (ITSP) that supplied the equipment.
- If you are an authorized Cisco partner, contact Cisco technical support.

Managing Caller ID Service

The choice of caller ID (CID) method is dependent on your area/region. To configure CID, use the following parameters:

Parameter	Tab	Description and Value
Caller ID Method	Regional	The following choices are available: ▪ **Bellcore (N.Amer,China)**—CID, CIDCW, and VMWI. FSK sent after first ring (same as ETSI FSK sent after first ring) (no polarity reversal or DTAS). ▪ **DTMF (Finland, Sweden)**—CID only. DTMF sent after polarity reversal (and no DTAS) and before first ring. ▪ **DTMF (Denmark)**—CID only. DTMF sentbefore first ring with no polarity reversal and no DTAS. ▪ **ETSI DTMF**—CID only. DTMF sent after DTAS (and no polarity reversal) and before first ring. ▪ **ETSI DTMF With PR**—CID only. DTMF sent after polarity reversal and DTAS and before first ring. ▪ **ETSI DTMF After Ring**—CID only. DTMF sent after first ring (no polarity reversal or DTAS). ▪ **ETSI FSK**—CID, CIDCW, and VMWI. FSK sent after DTAS (but no polarity reversal) and before first ring. Waits for ACK from CPE after DTAS for CIDCW. ▪ **ETSI FSK With PR (UK)**—CID, CIDCW, and VMWI. FSK is sent after polarity reversal and DTAS and before first ring. Waits for ACK from CPE after DTAS for CIDCW. Polarity reversal is applied only if equipment is on hook. ▪ **DTMF (Denmark) With PR**—CID only. DTMF sent after polarity reversal (and no DTAS) and before first ring. The default is **Bellcore(N.Amer, China)**.
Caller ID FSK Standard	Regional	The ATA device supports bell 202 and v.23 standards for caller ID generation. Select the FSK standard you want to use, **bell 202** or **v.23**. The default is **bell 202**. This field is not found in the PAP2T.

There are three types of Caller ID:

- On Hook Caller ID Associated with Ringing — This type of Caller ID is used for incoming calls when the attached phone is on hook. See the following figure (a) – (c). All CID methods can be applied for this type of CID.
- On Hook Caller ID Not Associated with Ringing — This feature is used to send VMWI signal to the phone to turn the message waiting light on and off (see Figure 1 (d) and (e)). This is available only for FSK-based CID methods: (Bellcore, ETSI FSK, and ETSI FSK With PR).
- Off Hook Caller ID — This is used to delivery caller-id on incoming calls when the attached phone is off hook (see the following figure). This can be call waiting caller ID (CIDCW) or to notify the user that the far end party identity has changed or updated (such as due to a call transfer). This is available only for FSK-based CID methods: (Bellcore, ETSI FSK, and ETSI FSK With PR).

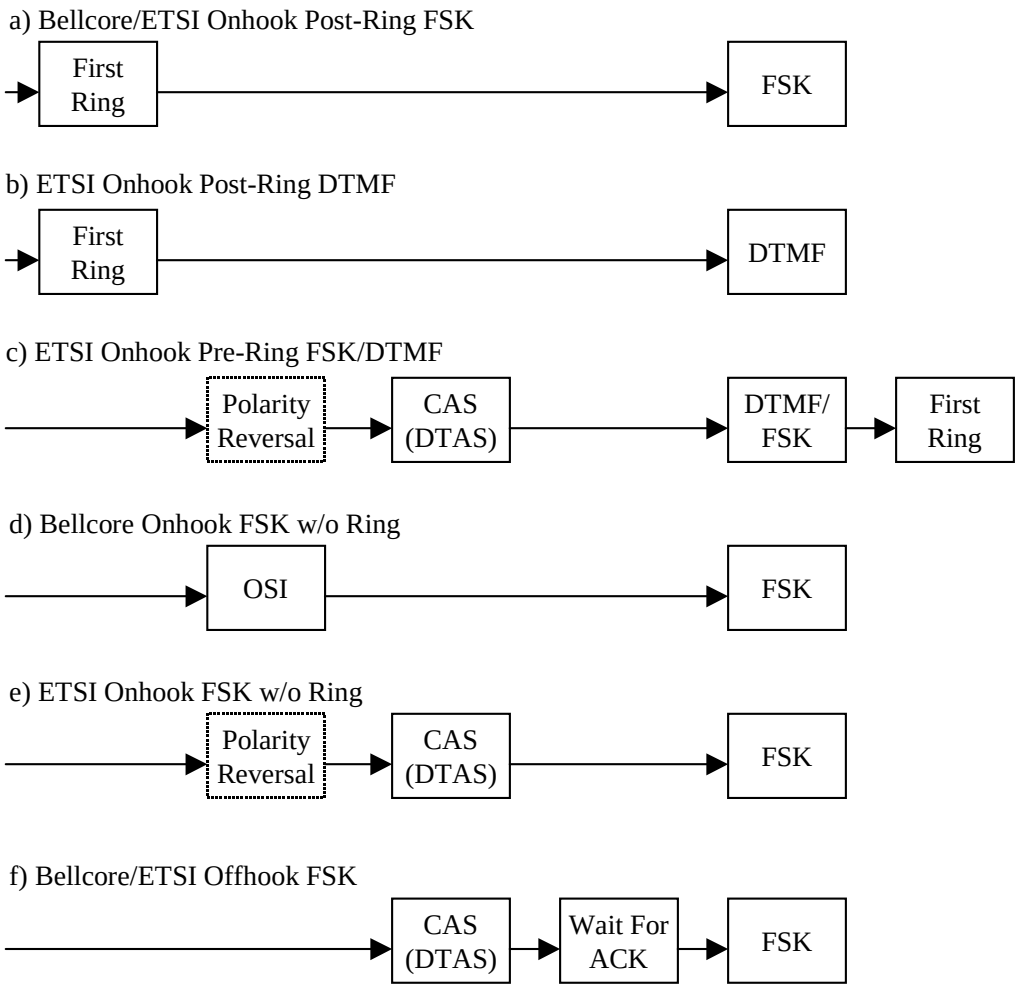

Silence Suppression and Comfort Noise Generation

Voice Activity Detection (VAD) with Silence Suppression is a means of increasing the number of calls supported by the network by reducing the required bandwidth for a single call. VAD uses a sophisticated algorithm to distinguish between speech and non-speech signals. Based on the current and past statistics, the VAD algorithm decides whether or not speech is present. If the VAD algorithm decides speech is not present, the silence suppression and comfort noise generation is activated. This is accomplished by removing and not transmitting the natural silence that occurs in normal two-way connection. The IP bandwidth is used only when someone is speaking. During the silent periods of a telephone call, additional bandwidth is available for other voice calls or data traffic because the silence packets are not being transmitted across the network.

Comfort Noise Generation provides artificially-generated background white noise (sounds), designed to reassure callers that their calls are still connected during silent periods. If Comfort Noise Generation is not used, the caller may think the call has been disconnected because of the “dead silence” periods created by the VAD and Silence Suppression feature.

Silence suppression is configured in the Line and PSTN Line tabs. See **“ATA Routing Field Reference,” on page 105**.

Configuring Dial Plans

Dial plans determine how the digits are interpreted and transmitted. They also determine whether the dialed number is accepted or rejected. You can use a dial plan to facilitate dialing or to block certain types of calls such as long distance or international.

This section includes information that you need to understand dial plans, as well as procedures for configuring your own dial plans. This section includes the following topics:

- **"About Dial Plans," on page 61**
- **"Editing Dial Plans," on page 70**

About Dial Plans

This section provides information to help you understand how dial plans are implemented.

Refer to the following topics:

- **"Digit Sequences," on page 61**
- **"Digit Sequence Examples," on page 64**
- **"Acceptance and Transmission the Dialed Digits," on page 66**
- **"Dial Plan Timer (Off-Hook Timer)," on page 67**
- **"Interdigit Long Timer (Incomplete Entry Timer)," on page 68**
- **"Interdigit Short Timer (Complete Entry Timer)," on page 68**

Digit Sequences

A dial plan contains a series of digit sequences, separated by the | character. The entire collection of sequences is enclosed within parentheses. Each digit sequence within the dial plan consists of a series of elements, which are individually matched to the keys that the user presses.

NOTE White space is ignored, but may be used for readability.

Digit Sequence	Function
`0 1 2 3 4 5 6 7 8 9 0 * #`	Enter any of these characters to represent a key that the user must press on the phone keypad.
`x`	Enter `x` to represent any character on the phone keypad.
`[sequence]`	Enter characters within square brackets to create a list of accepted key presses. The user can press any one of the keys in the list. ▪ Numeric range For example, you would enter `[2-9]` to allow the user to press any one digit from 2 through 9. ▪ Numeric range with other characters For example, you would enter `[35-8*]` to allow the user to press 3, 5, 6, 7, 8, or *.
`.` (period)	Enter a period for element repetition. The dial plan accepts 0 or more entries of the digit. For example, `01.` allows users to enter 0, 01, 011, 0111, and so on.
`<dialed:substituted>`	For sequence substitution, use this format to indicate that certain dialed digits are replaced by other characters when the sequence is transmitted. The `dialed` digits can be zero or more characters. **EXAMPLE 1:** `<8:1650>xxxxxxx` When the user presses 8 followed by a seven-digit number, the system automatically replaces the dialed 8 with 1650. If the user dials **85550112**, the system transmits **16505550112**. **EXAMPLE 2:** `<:1>xxxxxxxxxx` In this example, no digits are replaced. When the user enters a 10-digit string of numbers, the number 1 is added at the beginning of the sequence. If the user dials **9725550112**, the system transmits **19725550112**

Digit Sequence	Function
, (comma)	For an intersequence tone, enter a comma between digits to play an “outside line” dial tone after a user-entered sequence. **EXAMPLE:** `9, 1xxxxxxxxxx` An “outside line” dial tone is sounded after the user presses 9, and the tone continues until the user presses 1.
! (exclamation point)	For number barring, enter an exclamation point to prohibit a dial sequence pattern. **EXAMPLE:** `1900xxxxxxx!` The system rejects any 11-digit sequence that begins with 1900.
`*xx`	Enter an asterisk to allow the user to enter a 2-digit star code.
`S0 or L0`	For Interdigit Timer Master Override, enter `S0` to reduce the short inter-digit timer to 0 seconds, or enter L0 to reduce the long inter-digit timer to 0 seconds.
`P`	For a pause, enter `P` followed by a number and a space. The duration of the pause is the specified number of seconds. This feature is typically used for implementation of a hot line and warm line, with 0 delay for the hot line and a non-zero delay for a warm line. **EXAMPLE:** `P5` **REVIEW COMMENT:** need example

NOTE The SPA implicitly appends the vertical code sequences entered in the regional parameter settings to the end of the dial plan. Likewise, if Enable_IP_Dialing is enabled, then IP dialing is also accepted on the associated line.

Digit Sequence Examples

The following examples show digit sequences that you can enter in a dial plan.

In a complete dial plan entry, sequences are separated by a pipe character (|), and the entire set of sequences is enclosed within parentheses.

EXAMPLE: `( [1-8]xx | 9, xxxxxxx | 9, <:1>[2-9]xxxxxxxxx | 8, <:1212>xxxxxxx | 9, 1 [2-9] xxxxxxxxx | 9, 1 900 xxxxxxx ! | 9, 011xxxxxx. | 0 | [49]11 )`

- Extensions on your system

  EXAMPLE: `( [1-8]xx | 9, xxxxxxx | 9, <:1>[2-9]xxxxxxxxx | 8, <:1212>xxxxxxx | 9, 1 [2-9] xxxxxxxxx | 9, 1 900 xxxxxxx ! | 9, 011xxxxxx. | 0 | [49]11 )`

  [1-8]xx Allows a user dial any three-digit number that starts with the digits 1 through 8. If your system uses four-digit extensions, you would instead enter the following string: **[1-8]xxx**

- Local dialing with seven-digit number

  EXAMPLE: `( [1-8]xx | 9, xxxxxxx | 9, <:1>[2-9]xxxxxxxxx | 8, <:1212>xxxxxxx | 9, 1 [2-9] xxxxxxxxx | 9, 1 900 xxxxxxx ! | 9, 011xxxxxx. | 0 | [49]111)`

  9, xxxxxxx After a user presses 9, an external dial tone sounds. The user can enter any seven-digit number, as in a local call.

- Local dialing with 3-digit area code and a 7-digit local number

  EXAMPLE: `( [1-8]xx | 9, xxxxxxx | 9, <:1>[2-9]xxxxxxxxx | 8, <:1212>xxxxxxx | 9, 1 [2-9] xxxxxxxxx | 9, 1 900 xxxxxxx ! | 9, 011xxxxxx. | 0 | [49]11 )`

  9, <:1>[2-9]xxxxxxxxx This example is useful where a local area code is required. After a user presses 9, an external dial tone sounds. The user must enter a 10-digit number that begins with a digit 2 through 9. The system automatically inserts the 1 prefix before transmitting the number to the carrier.

- Local dialing with an automatically inserted 3-digit area code

  EXAMPLE: `( [1-8]xx | 9, xxxxxxx | 9, <:1>[2-9]xxxxxxxxx | 8, <:1212>xxxxxxx | 9, 1 [2-9] xxxxxxxxx | 9, 1 900 xxxxxxx ! | 9, 011xxxxxx. | 0 | [49]11 )`

8, <:1212>xxxxxxx This is example is useful where a local area code is required by the carrier but the majority of calls go to one area code. After the user presses 8, an external dial tone sounds. The user can enter any seven-digit number. The system automatically inserts the 1 prefix and the 212 area code before transmitting the number to the carrier.

- U.S. long distance dialing

  EXAMPLE: `( [1-8]xx | 9, xxxxxxx | 9, <:1>[2-9]xxxxxxxxx | 8, <:1212>xxxxxxx | 9, 1 [2-9] xxxxxxxxx | 9, 1 900 xxxxxxx ! | 9, 011xxxxxx. | 0 | [49]11 )`

  9, 1 [2-9] xxxxxxxxx After the user presses 9, an external dial tone sounds. The user can enter any 11-digit number that starts with 1 and is followed by a digit 2 through 9.

- Blocked number

  EXAMPLE: `( [1-8]xx | 9, xxxxxxx | 9, <:1>[2-9]xxxxxxxxx | 8, <:1212>xxxxxxx | 9, 1 [2-9] xxxxxxxxx | 9, 1 900 xxxxxxx ! | 9, 011xxxxxx. | 0 | [49]11 )`

  9, 1 900 xxxxxxx ! This digit sequence is useful if you want to prevent users from dialing numbers that are associated with high tolls or inappropriate content, such as 1-900 numbers in the U.S.. After the user press 9, an external dial tone sounds. If the user enters an 11-digit number that starts with the digits 1900, the call is rejected.

- U.S. international dialing

  EXAMPLE: `( [1-8]xx | 9, xxxxxxx | 9, <:1>[2-9]xxxxxxxxx | 8, <:1212>xxxxxxx | 9, 1 [2-9] xxxxxxxxx | 9, 1 900 xxxxxxx ! | 9, 011xxxxxx. | 0 | [49]11 )`

  9, 011xxxxxx. After the user presses 9, an external dial tone sounds. The user can enter any number that starts with 011, as in an international call from the U.S.

- Informational numbers

  EXAMPLE: `( [1-8]xx | 9, xxxxxxx | 9, <:1>[2-9]xxxxxxxxx | 8, <:1212>xxxxxxx | 9, 1 [2-9] xxxxxxxxx | 9, 1 900 xxxxxxx ! | 9, 011xxxxxx. | 0 | [49]11 )`

  0 | [49]11 This example includes two digit sequences, separated by the pipe character. The first sequence allows a user to dial 0 for an operator. The second sequence allows the user to enter 411 for local information or 911 for emergency services.

Acceptance and Transmission the Dialed Digits

When a user dials a series of digits, each sequence in the dial plan is tested as a possible match. The matching sequences form a set of candidate digit sequences. As more digits are entered by the user, the set of candidates diminishes until only one or none are valid. When a terminating event occurs, the SPA9000 either accepts the user-dialed sequence and initiates a call, or else rejects the sequence as invalid. The user hears the reorder (fast busy) tone if the dialed sequence is invalid.

The following table explains how terminating events are processed.

Terminating Event	Processing
The dialed digits do not match any sequence in the dial plan.	The number is rejected.
The dialed digits exactly match one sequence in the dial plan.	▪ If the sequence is allowed by the dial plan, the number is accepted and is transmitted according to the dial plan. ▪ If the sequence is blocked by the dial plan, the number is rejected.
A timeout occurs.	The number is rejected if the dialed digits are not matched to a digit sequence in the dial plan within the time specified by the applicable interdigit timer. ▪ The Interdigit Long Timer applies when the dialed digits do not match any digit sequence in the dial plan. The default value is 10 seconds. ▪ The Interdigit Short Timer applies when the dialed digits match one or more candidate sequences in the dial plan. The default value is 3 seconds.
The user presses the # key or the **dial** softkey on the phone display.	▪ If the sequence is complete and is allowed by the dial plan, the number is accepted and is transmitted according to the dial plan. ▪ If the sequence is incomplete or is blocked by the dial plan, the number is rejected.

Dial Plan Timer (Off-Hook Timer)

You can think of the Dial Plan Timer as "the off-hook timer." This timer starts counting when the phone goes off hook. If no digits are dialed within the specified number of seconds, the timer expires and the null entry is evaluated. Unless you have a special dial plan string to allow a null entry, the call is rejected. The default value is 5.

Syntax for the Dial Plan Timer

SYNTAX: `(Ps<:n> | dial plan )`

- **s:** The number of seconds; if no number is entered after P, the default timer of 5 seconds applies.
- **n:** (optional): The number to transmit automatically when the timer expires; you can enter an extension number or a DID number. No wildcard characters are allowed because the number will be transmitted as shown. If you omit the number substitution, <:n>, then the user hears a reorder (fast busy) tone after the specified number of seconds.

Examples for the Dial Plan Timer

- Allow more time for users to start dialing after taking a phone off hook.

  EXAMPLE: `(P9 | (9,8<:1408>[2-9]xxxxxx | 9,8,1[2-9]xxxxxxxxx | 9,8,011xx. | 9,8,xx.|[1-8]xx)`

  P9 After taking a phone off hook, a user has 9 seconds to begin dialing. If no digits are pressed within 9 seconds, the user hears a reorder (fast busy) tone. By setting a longer timer, you allow more time for users to enter the digits.

- Create a hotline for all sequences on the System Dial Plan

  EXAMPLE: `(P9<:23> | (9,8<:1408>[2-9]xxxxxx | 9,8,1[2-9]xxxxxxxxx | 9,8,011xx. | 9,8,xx.|[1-8]xx)`

  P9<:23> After taking the phone off hook, a user has 9 seconds to begin dialing. If no digits are pressed within 9 seconds, the call is transmitted automatically to extension 23.

- Create a hotline on a line button for an extension

  EXAMPLE: `( P0 <:1000>)`

  With the timer set to 0 seconds, the call is transmitted automatically to the specified extension when the phone goes off hook. Enter this sequence in the Phone Dial Plan for Ext 2 or higher on a client station.

Interdigit Long Timer (Incomplete Entry Timer)

You can think of this timer as the "incomplete entry" timer. This timer measures the interval between dialed digits. It applies as long as the dialed digits do not match any digit sequences in the dial plan. Unless the user enters another digit within the specified number of seconds, the entry is evaluated as incomplete, and the call is rejected. The default value is 10 seconds.

NOTE This section explains how to edit a timer as part of a dial plan. Alternatively, you can modify the Control Timer that controls the default interdigit timers for all calls. See **"Resetting the Control Timers," on page 70**.

Syntax for the Interdigit Long Timer

SYNTAX: L:*s*, (*dial plan*)

- **s:** The number of seconds; if no number is entered after L:, the default timer of 5 seconds applies.
- Note that the timer sequence appears to the left of the initial parenthesis for the dial plan.

Example for the Interdigit Long Timer

EXAMPLE: L:15, (9,8<:1408>[2-9]xxxxxx | 9,8,1[2-9]xxxxxxxxx | 9,8,011xx. | 9,8,xx.|[1-8]xx)

L:15, This dial plan allows the user to pause for up to 15 seconds between digits before the Interdigit Long Timer expires. This setting is especially helpful to users such as sales people, who are reading the numbers from business cards and other printed materials while dialing.

Interdigit Short Timer (Complete Entry Timer)

You can think of this timer as the "complete entry" timer. This timer measures the interval between dialed digits. It applies when the dialed digits match at least one digit sequence in the dial plan. Unless the user enters another digit within the specified number of seconds, the entry is evaluated. If it is valid, the call proceeds. If it is invalid, the call is rejected. The default value is 3 seconds.

Syntax for the Interdigit Short Timer

- **SYNTAX 1:** S:*s*, (*dial plan*)

  Use this syntax to apply the new setting to the entire dial plan within the parentheses.

- **SYNTAX 2:** *sequence* Ss

  Use this syntax to apply the new setting to a particular dialing sequence.

  s: The number of seconds; if no number is entered after S, the default timer of 5 seconds applies.

Examples for the Interdigit Short Timer

- Set the timer for the entire dial plan.

  EXAMPLE: S:6, (9,8<:1408>[2-9]xxxxxx | 9,8,1[2-9]xxxxxxxxx | 9,8,011xx. | 9,8,xx.|[1-8]xx)

  S:6, While entering a number with the phone off hook, a user can pause for up to 15 seconds between digits before the Interdigit Short Timer expires. This setting is especially helpful to users such as sales people, who are reading the numbers from business cards and other printed materials while dialing.

- Set an instant timer for a particular sequence within the dial plan.

  EXAMPLE: (9,8<:1408>[2-9]xxxxxx | 9,8,1[2-9]xxxxxxxxxS0 | 9,8,011xx. | 9,8,xx.|[1-8]xx)

  9,8,1[2-9]xxxxxxxxxS0 With the timer set to 0, the call is transmitted automatically when the user dials the final digit in the sequence.

Editing Dial Plans

You can edit dial plans and can modify the control timers.

STEP 1 Start Internet Explorer, and then enter the IP address of the SPA9000. Click **Admin Login** and then click **Advanced**.

Entering the Line Interface Dial Plan

This dial plan is used to strip steering digits from a dialed number before it is transmitted out to the carrier.

STEP 1 Connect to the administration web server, and choose Admin access with Advanced settings.

STEP 2 Click **Voice tab > Line *N***, where *N* represents the line interface number.

STEP 3 Scroll down to the *Dial Plan* section.

STEP 4 Enter the digit sequences in the *Dial Plan* field. For more information, see **"About Dial Plans," on page 61**.

STEP 5 Click **Submit All Changes**.

Resetting the Control Timers

You can use the following procedure to reset the default timer settings for all calls.

NOTE If you need to edit a timer setting only for a particular digit sequence or type of call, you can edit the dial plan. See **"About Dial Plans," on page 61**.

STEP 1 Connect to the administration web server, and choose Admin access with Advanced settings.

STEP 2 Click **Voice tab > Regional**.

STEP 3 Scroll down to the *Control Timer Values* section.

STEP 4 Enter the desired values in the *Interdigit Long Timer* field and the *Interdigit Short Timer* field. Refer to the definitions at the beginning of this section.

Secure Call Implementation

This section describes secure call implementation with the ATA device . It includes the following topics:

- **"Enabling Secure Calls" section on page 71**
- **"Secure Call Details" section on page 72**
- **"Using a Mini-Certificate" section on page 73**
- **"Generating a Mini Certificate" section on page 73**

NOTE This is an advanced topic meant for experience installers. See also the *LVS Provisioning Guide*.

Enabling Secure Calls

A secure call is established in two stages. The first stage is no different from normal call setup. The second stage starts after the call is established in the normal way with both sides ready to stream RTP packets.

In the second stage, the two parties exchange information to determine if the current call can switch over to the secure mode. The information is transported by base64 encoding embedded in the message body of SIP INFO requests, and responses using a proprietary format. If the second stage is successful, the ATA device plays a special Secure Call Indication Tone for a short time to indicate to both parties that the call is secured and that RTP traffic in both directions is being encrypted.

If the user has a phone that supports call waiting caller ID (CIDCW) and that service is enabled, the CID will be updated with the information extracted from the Mini-Certificate received from the remote party. The Name field of the CID will be prepended with a '$' symbol. Both parties can verify the name and number to ensure the identity of the remote party.

The signing agent is implicit and must be the same for all ATAs that communicate securely with each other. The public key of the signing agent is pre-configured into the ATA device by the administrator and is used by the ATA device to verify the Mini-Certificate of its peer. The Mini-Certificate is valid if it has not expired, and it has a valid signature.

The ATA device can be configured so that, by default, all outbound calls are either secure or not secure. If secure by default, the user has the option to disable security when making a call by dialing *19 before dialing the target number. If not secure by default, the user can make a secure outbound call by dialing *18 before dialing the target number. However, the user cannot force inbound calls to be secure or not secure; that depends on whether the caller has security enabled or not.

The ATA device will not switch to secure mode if the CID of the called party from its Mini-Certificate does not agree with the user-id used in making the outbound call. The ATA device performs this check after receiving the Mini-Certificate of the called party

Secure Call Details

Looking at the second stage of setting up a secure call in greater detail, this stage can be further divided into two steps.

STEP 1 The caller sends a “Caller Hello” message (base64 encoded and embedded in the message body of a SIP INFO request) to the called party with the following information:

- Message ID (4B)
- Version and flags (4B)
- SSRC of the encrypted stream (4B)
- Mini-Certificate (252B)

Upon receiving the Caller Hello, the called party responds with a Callee Hello message (base64 encoded and embedded in the message body of a SIP response to the caller’s INFO request) with similar information, if the Caller Hello message is valid. The caller then examines the Callee Hello and proceeds to the next step if the message is valid.

STEP 2 The caller sends the “Caller Final” message to the called party with the following information:

- Message ID (4B)
- Encrypted Master Key (16B or 128b)
- Encrypted Master Salt (16B or 128b)

Using a Mini-Certificate

The Master Key and Master Salt are encrypted with the public key from the called party mini-certificate. The Master Key and Master Salt are used by both ends for deriving session keys to encrypt subsequent RTP packets. The called party then responds with a Callee Final message (which is an empty message).

The Mini-Certificate (MC) contains the following information:

- User Name (32B)
- User ID or Phone Number (16B)
- Expiration Date (12B)
- Public Key (512b or 64B)
- Signature (1024b or 512B)

The MC has a 512-bit public key used for establishing secure calls. The administrator must provision each subscriber of the secure call service with an MC and the corresponding 512-bit private key. The MC is signed with a 1024-bit private key of the service provider, which acts as the CA of the MC. The 1024-bit public key of the CA signing the MC must also be provisioned for each subscriber.

The CA public key is used to verify the MC received from the other end. If the MC is invalid, the call will not switch to secure mode. The MC and the 1024-bit CA public key are concatenated and base64 encoded into the single parameter *Mini Certificate*. The 512-bit private key is base64 encoded into the *SRTP Private Key* parameter, which should be kept secret, like a password. (*Mini Certificate* and *SRTP Private Key* are configured in the Line tabs.)

Because the secure call establishment relies on exchange of information embedded in message bodies of SIP INFO requests/responses, the service provider must ensure that the network infrastructure allows the SIP INFO messages to pass through with the message body unmodified.

Generating a Mini Certificate

Cisco provides a Mini Certificate Generator for the generation of mini certificates and private keys. Partners can download the Mini Certificate Generator by going to Cisco Partner Central, Voice & Conferencing page, Technical Resources section. Use the following URL:
http://www.cisco.com/web/partners/sell/smb/products/voice_and_conferencing.html#~vc_technical_resources

NOTE The partner sites require a logon.

The Mini Certificate Generator uses the following syntax:

`gen_mc` *ca-key user-name user-id expire-date*

Where:

- *ca-key* is a text file with the base64 encoded 1024-bit CA private/public key pairs for signing/verifying the MC, such as the following:


```
9CC9aYU1X5lJuU+EBZmi3AmcqE9U1LxEOGwopaGyGOh3VyhKgi6JaVtQZt87PiJINKW8XQj3B9Qq
e3VgYxWCQNa335YCnDsenASeBxuMIEaBCYd1l1fVEodJZOGwXwfAde0MhcbD0kj7LVlzcsTyk2TZ
YTccnZ75TuTjj13qvYs=5nEtOrkCa84/mEwl3D9tSvVLyliwQ+u/
Hd+C8u5SNk7hsAUZaA9TqH8Iw0J/
IqSrsf6scsmundY5j7Z5mK5J9uBxSB8t8vamFGD0pF4zhNtbrVvIXKI9kmp4vph1C5jzO9gDfs3M
F+zjyYrVUFdM+pXtDBxmM+fGUfrpAuXb7/k=
```


- *user-name* is the name of the subscriber, such as “Joe Smith”. Maximum length is 32 characters
- *user-id* is the User ID of the subscriber, which must match exactly the user-id used in the INVITE when making the call, such as “14083331234”. The maximum length is 16 characters.
- *expire-date* is the expiration date of the MC, such as “00:00:00 1/1/34” (34=2034). Internally the date is encoded as a fixed 12B string: 000000010134

The tool generates the *Mini Certificate* and *SRTP Private Key* parameters that can be provisioned.

EXAMPLE:

```
gen_mc ca_key “Joe Smith” 14085551234 “00:00:00 1/1/34”
```

This example produces the following Mini Certificate and SRTP Private Key:


```
<Mini Certificate>
Sm9lIFNtaXRoAAAAAAAAAAAAAAAAAAAAAAAAAAAAAAAAxNDA4NTU1MTIzNAAAAAAAMDAwMDAwMDEw
MTM00OvJakde2vVMF3Rw4pPXL7lAgIagMpbLSAG2+++YlSqt198Cp9rP/
xMGFfoPmDKGx6JFtkQ5sxLcuwgxpxpxkeXvpZKlYlpsb28L4Rhg5qZA+Gqj1hDFCmG6dffZ9SJhx
ES767G0JIS+N8lQBLr0AuemotknSjjjOy8c+1lTCd2t44Mh0vmwNg4fDck2YdmTMBR516xJt4/
uQ/
LJQlni2kwqlm7scDvll5k232EvvvVtCK0AYa4eWd6fQOpiESCO9CC9aYU1X5lJuU+EBZmi3AmcqE
9U1LxEOGwopaGyGOh3VyhKgi6JaVtQZt87PiJINKW8XQj3B9Qqe3VgYxWCQNa335YCnDsenASeBx
uMIEaBCYd1l1fVEodJZOGwXwfAde0MhcbD0kj7LVlzcsTyk2TZYTccnZ75TuTjj13qvYs=
<SRTP Private Key>
b/DWc96X4YQraCnYzl5en1CIUhVQQqrvcr6Qd/8R52IEvJjOw/
e+Klm4XiiFEPaKmU8UbooxKG36SEdKusp0AQ==
```

SIP Trunking and Hunt Groups on the SPA8000

The SPA8000 supports SIP Trunking, which allows you to connect a traditional PBX to VoIP services. In this configuration, calls go through the ITSP rather than the PSTN, yet the call routing functionality is similar to that of traditional PSTN lines.

You can configure up to four trunk groups for the purpose of inbound call routing and outbound caller identification. You can configure a trunk number on the SPA8000, such that an incoming call automatically rings the grouped lines simultaneously or in a specified order. For outbound calls, SIP Trunking ensures that all calls on a trunk line can be identified by the trunk number and a common caller ID. This feature helps you to ensure that calls are directed to available lines and that work groups such as sales teams can work together to answer calls. In addition, teams can project a common identity when placing outbound calls on a trunk.

This section provides information about SIP trunking and explains how to configure your trunk groups.

Refer to the following topics:

- **“About SIP Trunking,” on page 76**
- **“Setting the Trunk Group Call Capacity,” on page 78**
- **“Inbound Call Routing for a Trunk Group,” on page 78**
- **“Contact List for a Trunk Group,” on page 79**
- **“Outgoing Call Routing for a Trunk Group,” on page 81**
- **“Configuring a Trunk Group,” on page 82**
- **“Additional Notes About Trunk Groups,” on page 85**
- **“Setting the Hunt Policy,” on page 85**
- **“Trunk Group Management,” on page 83**

About SIP Trunking

The SIP Trunking feature allows a traditional PBX to seamlessly migrate from PSTN service to VoIP service over a broadband link. The SPA8000 offers up to eight telephone lines to the PBX.

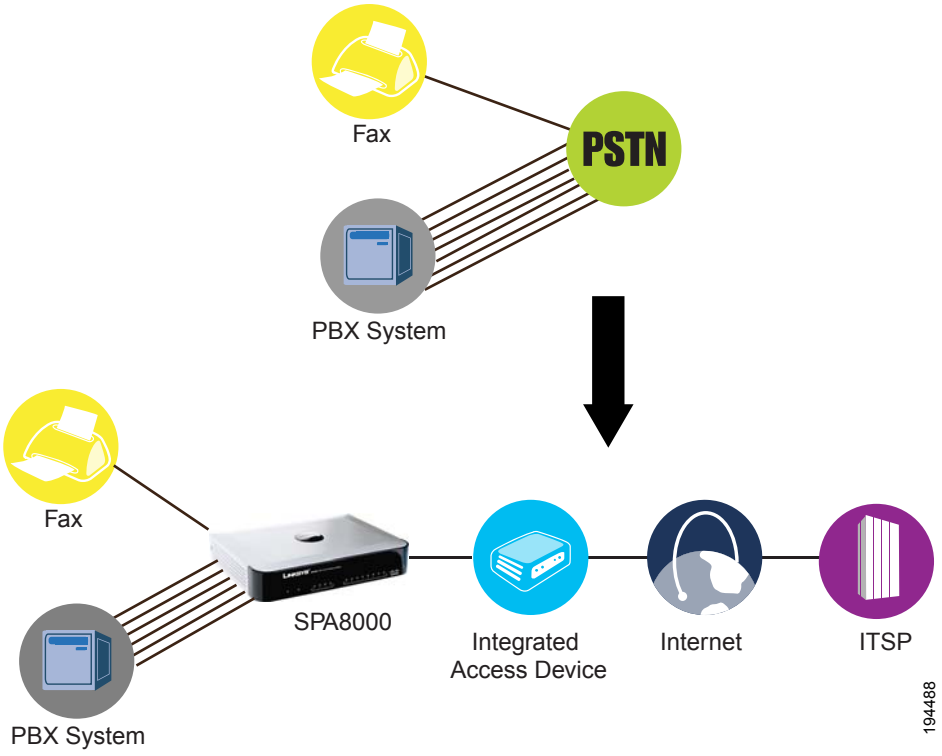

The SPA8000 offers four trunk groups, numbered T1, T2, T3, and T4. A SIP-based voice service with an ITSP can be configured on each trunk group with a distinct phone number. Each of the eight SPA8000 lines can be configured either as a standalone line, as in a classic ATA FXS port, or as a trunk line that is associated with a trunk group.

- Inbound calling: A trunk group offers a single number for callers to call into the small business, with the capability to programmatically ring one or more trunk lines.
- Outbound calling: When a PBX phone makes a call, the PBX selects one of the available trunk lines. The trunk line assumes the Caller ID of the trunk group.

The following figure shows a simplified logical block diagram of the SPA8000 with the SIP Trunking feature.

Figure 1 Logical Block Diagram of SIP Trunking

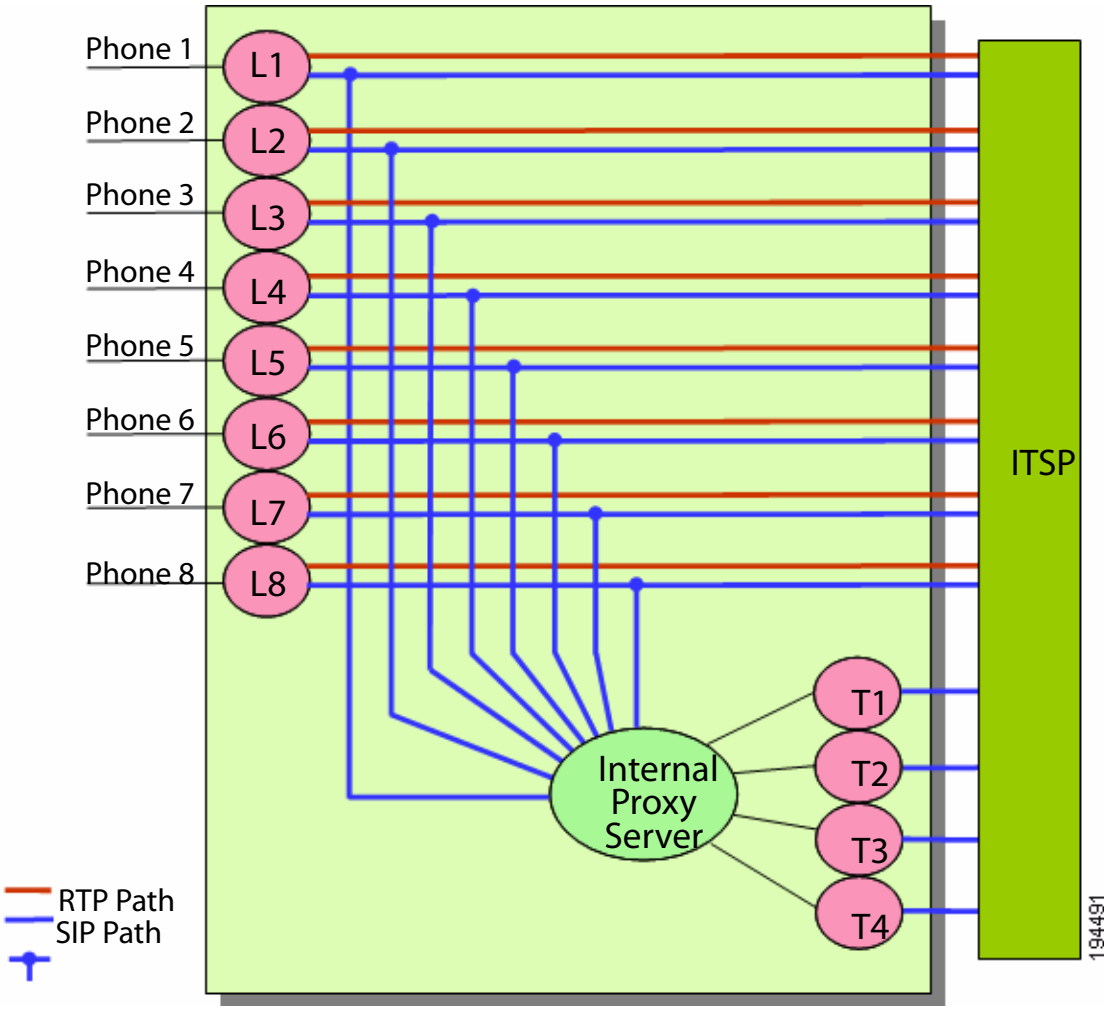

- SIP Path: As a standalone line, the SIP User Agent (SIP UA) exchanges signaling directly with the ITSP equipment. As a trunk line, the Line UA exchanges signaling with the internal proxy server only. The Internal Proxy Server handles all SIP signalling between both ends of the call, from call establishment to termination.
- RTP Path: Whether the line is standalone or a member of a trunk group, the Line UA exchanges RTP packets directly with the ITSP equipment.

NOTE Although the figure shows only one ITSP account, each standalone line and each Trunk Group can be configured with a different ITSP (with some limitations applied).

Setting the Trunk Group Call Capacity

The ITSP may set a limit to the number of calls that can be made on a trunk group. You can configure a trunk group's call capacity parameter to meet the requirements of the ITSP. Both incoming call and outgoing calls are counted towards this limit. The call capacity has the following impact on call handling:

- Inbound calls: When the limit is reached, the Trunk UA replies 486 to the caller.
- Outbound calls: When the limit is reached, the Line UA plays a fast busy tone to the caller. Note that a trunk line can make an outgoing call only through its own trunk. If that trunk reaches full capacity, it will not attempt to failover to use other trunks.

You can configure this setting in the *Voice tab > Trunk (T1 … T4)* page, *Subscriber Information* section, *Call Capacity* field. For more information, see **"Configuring a Trunk Group," on page 82**.

Inbound Call Routing for a Trunk Group

An incoming call is handled as follows:

STEP 1 When an incoming call is detected by the Trunk UA, the UA first checks if there is capacity to handle the call. If there is insufficient capacity, the UA rejects the call with a 486 response.

STEP 2 If there is spare call capacity, the UA consults the Contact List to determine which line or lines to ring (that is, for the proxy to send SIP INVITE to), and starts "hunting." (See **"Configuring a Trunk Group," on page 82**)

STEP 3 When a line is selected to ring, one or more PBX phones may be alerted, according to the PBX features and configuration.

STEP 4 The Caller ID of the external Caller is signaled by the Line UA out to the FXS port using the configured Caller ID method (FSK, DTMF, etc.). The PBX must be able to detect Caller ID signal in order for the proper Caller ID to show.

STEP 5 If the call is picked up by the PBX, the Line UA replies 200 OK with SDP to the internal Proxy. The Trunk UA in turn replies 200 OK to the ITSP and relay the Line SDP in the 200 OK message also. If all goes well, the Line UA and the ITSP equipment start exchanging RTP packets afterwards.

Contact List for a Trunk Group

The hunting process for incoming calls is controlled by the Contact List. The Contact List specifies the lines to ring, the order in which to ring them, the duration to ring one line before trying another line, and the maximum period to hunt. Below, the syntax is described and examples are provided to help you to configure the Contact List for each trunk group.

SYNTAX: `line[,line[,line[…]]],hunt=hrule[,cfwd=target]`

- `line`: The line numbers (1 - 8), or a wildcard * or ? to represent all lines.
  - The Trunk UA rings only trunk lines, that is, lines that are assigned to a trunk group through the *Voice tab > Line* page, *Trunk Group* field. The Trunk UA does not ring any standalone lines that are included in the Contact List. The Trunk UA rings any trunk line that is included in the list, even if it is not assigned to the particular trunk group for this Contact List.
  - You can instruct the SPA8000 to hunt only the phones that are on-hook, through the *Voice tab > SIP page, Trunking Parameters* section, *Hunt Policy* field. See **"Setting the Hunt Policy," on page 85**.
- `hunt=hrule`: The hunt order, ring interval, and maximum duration, in the following format: `hunt=algo;interval;max`
  - *algo*: The hunt order.
    - `re`: Restart. Hunting starts at the beginning of the list. If the first line does not answer within the specified `interval` (see below), the hunt proceeds through the lines in sequential order.
    - `ne`: Next. The Trunk UA determines the line that was chosen in the previous hunt, and hunting starts with the next line in the list. If that line does not answer within the specified `interval` (see below), the hunt proceeds through the lines in sequential order.
    - `ra`: Random order. The Trunk UA randomly chooses a line from the list. If the selected line does not answer within the specified `interval` (see

below), the hunt proceeds randomly through the unchosen lines until each line is tried.

  - `al`: All. The Trunk UA rings all the lines at the same time.

- `interval`: The number of seconds to wait for one line to answer, before choosing another line. If interval is *, the hunt is stopped at the first line that starts ringing, and rings the line until it answers, or the caller hangs up, or the line's ringer times out.

- `max`: The maximum duration of the hunt, either in seconds or cycles. When this limit is reached, the call is rejected or is forwarded to the specified call forward number (see below).

  - If `max` is greater than `interval`, it represents the total time in seconds to hunt.

  - If `max` is less than `interval`, it represents the maximum number of times to cycle through the hunt group. If max is 0, hunting continues indefinitely until the caller either hangs up or the call is answered. Exceptions: This value is ignored if `algo = all`, or `interval = *` (but it must be present and should be set to 1).

- `cfwd=`*`target:`* If the call is unanswered and the maximum hunting duration has been met, the call is forwarded to the specified number. When forwarding the call, the SPA8000 sends a 302 response to the ITSP.

NOTE The call forward settings for the individual lines are ignored during hunting. Instead, the cfwd settings in the Contact List are used.

EXAMPLES:

- `1,2,3,4,5,6,7,8,hunt=re;*;1`
  Lines 1 through 8 are included (`1,2,3,4,5,6,7,8`). The hunt starts at the beginning of the list (`hunt=re`). When an available line is found, the call stays with the line until the call is either answered, rejected, or cancelled by the caller (* is entered for `interval`).

- `?,hunt=al;30;1,cfwd=14085550100`
  A wildcard character (?) is used to represent “all trunk lines.” All lines ring simultaneously (`hunt=al`). If there is no answer after 30 seconds (`30`), the call is forwarded to the specified number (`cfwd=14085550100`).

- `?,hunt=ra;12;1,cfwd=14085550123`
  A wildcard character is used to represent “all trunk lines.” The Trunk UA

chooses lines in random order (`hunt=ra`). If a selected line does not answer within 12 seconds (`12`), the Trunk UA chooses another line at random. If there is no answer after 1 cycle (`1`), the call is forwarded to forwarded to the specified number (`cfwd=14085550123`).

- `?,hunt=ra;*;1,cfwd=14085550155`
  A wildcard character is used to represent "all trunk lines." The Trunk UA chooses lines in random order (`hunt=ra`). The interval is `*`, meaning the hunt stops when a selected line starts ringing, and will ring the line until it answers, or the caller hangs up, or the line's ringer times out. If the ringer times out, the call is automatically forwarded to the specified number (`cfwd=14085550155`).

Outgoing Call Routing for a Trunk Group

Outbound calls on a trunk line are handled as follows:

STEP 1 When a PBX phone selects an outside line, the PBX looks for an open line. If the PBX finds an open line, it takes the line off hook and bridges the audio between the PBX phone and the line. On detecting the off hook signal, the SPA8000 Line UA plays dial tone and ready to collect digits from the PBX phone.

STEP 2 As the PBX phone user dials the number, the Line UA applies its dial plan to the number. If the Line UA detects an invalid number, it rejects the all by playing reorder tone, then howling tone, then silence. If a valid number is received, it sends a SIP INVITE message to the internal Proxy.

STEP 3 The Proxy routes the call to the trunk group UA for the line, and the trunk group UA will attempt to place the call to the ITSP if there is available capacity on the trunk. If there is no call capacity left on the trunk, the internal Proxy will reject the INVITE from the Line UA, which in turn terminates the call and plays reorder tone out to the FXS port.

NOTE The SPA8000 will also apply the Trunk Dial Plan on the number before sending out INVITE to the ITSP. This Trunk Dial Plan typically is redundant since the trunk should trust the number sent by the Line UA. By default the trunk dial plan allows any non-empty number: `([*#0-9A-D][*#0-9A-D].)`

Configuring a Trunk Group

To configure a hunt group, you must first specify the trunk lines by assigning lines to trunk groups. Then you enter the account information, specify the call capacity, and configure the Contact List.

Before you begin this procedure, determine which lines you want to associate with each trunk group that you are configuring. Refer to the following example:

Line	Trunk Group
1, 3, 5	T1
4, 6, 8	T2
2	None

STEP 1 Connect to the administration web server, and choose Admin access with Advanced settings.

STEP 2 Assign each line to a trunk group, as needed:

a. Click **Voice tab > L*n***, where ***n*** represents the number of the line interface.

b. In the *Trunk Group* field, near the top of the line configuration page, choose a trunk number or choose *none* for a standalone line (the default setting).

c. Repeat this step for each line that you want to add to a trunk group.

Voice > Ln > Trunk Group field

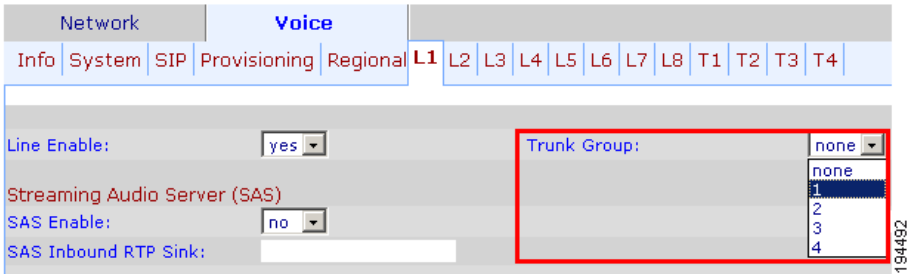

STEP 3 Enter the settings for each trunk group, as needed:

a. Click **Voice tab > T*n***, where *n* represents the trunk group number *(T1 … T4)*.

b. Enter the account information in the *Subscriber Information* section.

- Display Name: The Caller ID that you want to use for outbound calls on this line
- User ID: Your account number with the ITSP (usually the telephone number)
- Password: Your password for this ITSP account

c. In the *Call Capacity* field, enter the maximum number of concurrent calls allowed by your ITSP, or leave the default setting, *unlimited* (16 calls).

d. In the *Contact List* field, modify the contact list as needed. See **"Contact List for a Trunk Group," on page 79**.

e. Repeat this step for each trunk group that you need to configure.

STEP 4 Click **Submit All Changes**.

Trunk Group Management

You can check the status of the trunks by clicking the **Trunk Status** link, which appears both at the top right corner of the web page and at the lower left corner.

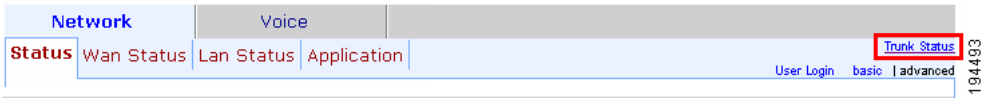

You also can connect directly to the Trunk Status Page by entering the following URL: `http://spa8000-ip-addr/status`. This page is available with the User Login or the Admin Login.

Trunk Status page

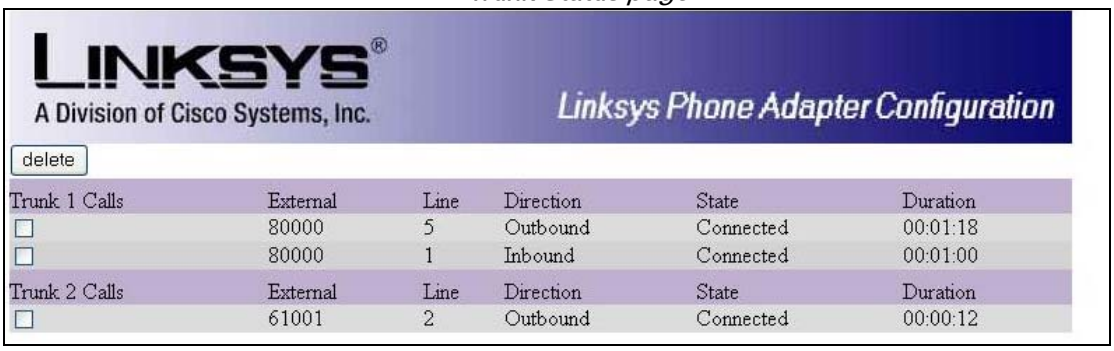

Trunk 1 Calls	External	Line	Direction	State	Duration
☐	80000	5	Outbound	Connected	00:01:18
☐	80000	1	Inbound	Connected	00:01:00
Trunk 2 Calls	**External**	**Line**	**Direction**	**State**	**Duration**
☐	61001	2	Outbound	Connected	00:00:12

The *Trunk Status* page shows all calls that are currently active on each trunk group.

This page shows a snapshot of the trunk activity. You can refresh the data at any time by clicking the Refresh button on the web browser toolbar. The page shows the following information:

- External: The called number
- Station: The SPA8000 line that is in use for this call
- Direction: The direction of the call, either Outbound or Inbound
- State: The state of the call
  - Calling: An outbound call was initiated but is not ringing at the other end.
  - Proceeding: The outbound call is ringing at the other end.
  - Ringing: An inbound call is ringing.
  - Connected: The call is connected.
- Duration: The duration of the call

In the case of a hung call, you can select the check box for the call and then click the Delete button to cancel the call.

Setting the Hunt Policy

You can configure the SPA8000 so that the hunt rule applies to all phone or only to the phones that are on hook.

STEP 1 Connect to the administration web server, and choose Admin access with Advanced settings.

STEP 2 Click **Voice tab > SIP**.

STEP 3 Scroll down to the *Trunking Parameters* section.

STEP 4 In the *Hunt Policy* field, choose the desired option:

- onhook only: The hunt includes only the phones that are on hook.
- any state: The hunt includes all phones regardless of the state.

STEP 5 Click **Submit All Changes**.

Additional Notes About Trunk Groups

This section includes information about other topics that may be of interest when you are configuring trunk groups:

- Voice mail: There is no individual mail box for a trunk line. For example, if lines 1, 2, 3, and 4 belong the trunk group T1, then the four lines implicitly share the same voice mail box from the ITSP. When there is new voice mail waiting in the trunk mail box, the UAs for all four lines will be notified by the ITSP via the internal Proxy, and all four lines will show the message waiting indicator, such as by playing stutter dial tone, if enabled by the administrator.
- Supplementary features: Supplementary features are offered at the line level only, not at the trunk level. Via the PBX, the phone user can trigger/control supplementary service and settings by signaling to the line port or configuring the line parameters. For more information, refer to the **Appendix B, "ATA Voice Field Reference."**

5

Configuring Music on Hold

This chapter explains how to configure Music on Hold using either a music file or streaming audio.

This chapter includes the following topics:

- **"Using the Internal Music Source for Music On Hold," on page 86**
- **"Configuring a Streaming Audio Server," on page 88**

Using the Internal Music Source for Music On Hold

An internal music source with the user ID **imusic** is available. It plays an internally stored music file repeatedly. The unit ships with a default music file (*Romance de Amor*). You can override this file by downloading a new file into the unit by using TFTP.

Refer to the following topics:

- **"Using the Internal Music Source," on page 86**
- **"Changing the Music File for the Internal Music Source," on page 87**

Using the Internal Music Source

To use the internal music source, simply identify imusic as the MOH server for each IP phone.

STEP 1 Use the phone menu to find the IP address of the phone:

a. Press the **Setup** button on the phone keypad.

b. Press **9 - Network**, and then scroll down to **2- Current IP Address**.

STEP 2 Start Internet Explorer, and then enter the IP address of the telephone. The Telephone Configuration page appears in a separate browser window.

STEP 3 Click **Admin Login**, and then click **Advanced**.

STEP 4 Click the **Ext 1** tab.

STEP 5 Scroll down to the *Call Feature Settings* section.

STEP 6 Enter the following value in the *MOH Server* field: **imusic**

STEP 7 Click **Submit All Changes**.

STEP 8 To verify, place a test call to the extension. When the call is answered and put on hold, the caller should hear the default music file (*Romance de Amor*).

Changing the Music File for the Internal Music Source

The following resources are required to change the music file for the internal music source:

- TFTP server software
- The IP address of the administration computer that is connected to the SPA9000
- A music source in G.711u format, sampled at 8000 samples/sec, up to 65.5 seconds in length, with no header information

STEP 1 Before you begin, make sure that you have TFTP server software running on your computer.

STEP 2 Start Internet Explorer, connect to the administration web server, and choose Admin access with Advanced settings.

STEP 3 Click **Voice tab > SIP**.

STEP 4 Scroll down to the *Internal Music Source Parameters* section.

STEP 5 Enter the following URL in the Internal Music URL field:
`tftp://server_IPaddress:portpath`

- server_IPaddress: The local IP address of the computer you are using as the TFTP server
- port: The port number used by the TFTP server (default **69**)

- path: The location and name of a music file in the correct format
- For example, if the computer local IP address is 192.168.0.5, the directory is named *musicdir*, and the converted music file is named *jazzmusic.dat*, then you would enter the following URL: `tftp://192.168.0.5:69/musicdir/jazzmusic.dat`

STEP 6 Click **Submit All Changes**. The unit reboots. Then the unit downloads the file and stores it in flash memory.

Configuring a Streaming Audio Server

This section describes how to use and configure a streaming audio server (SAS). It includes the following topics:

- **"About the Streaming Audio Server," on page 88**
- **"Configuring the Streaming Audio Server," on page 90**
- **"Using the IVR with an SAS Line," on page 91**

About the Streaming Audio Server

The Streaming Audio Server (SAS) feature lets you attach an audio source to an FXS port and use it as a streaming audio source device. If the unit has multiple FXS ports, either or both of the associated lines can be configured as an SAS server.

Use a media signal adapter or "music coupler" to connect an Ethernet cable from a media source to the FXS port. For example, the MC-9700 Music Coupler has been tested with ATA devices and is available at the following URL: www.neogadgets.com/cart/cart.php?target=product&product_id=17&substring=music+coupler

After you complete the required configuration, the FXS port is ready to stream audio. The functionality depends on the hook state of the FXS port:

- If the FXS port is off hook, an incoming call is answered automatically and audio is streamed to the calling party.

NOTE Each SAS server can maintain up to five simultaneous calls. If the second line on the unit is disabled, then the SAS line can maintain up to 10 simultaneous calls. Further incoming calls receive a busy signal (SIP 486 Response).

- If the FXS port is on-hook when the incoming call arrives, a SIP 503 response code is transmitted to indicate “Service Not Available.”
- If an incoming call is auto-answered, but later the FXS port changes to on-hook, the call is not terminated but continues to stream silence packets to the caller.
- The SAS line can be set up to refresh each streaming audio session periodically using a SIP re-INVITE message, which detects if the connection to the caller is down. If the caller does not respond to the refresh message, the SAS line terminates the call so that the streaming resource can be used for other callers.

Additional information:

- The SAS line does not ring for incoming calls even if the attached equipment is on-hook.
- If no calls are in session, battery is removed from tip-and-ring of the FXS port. Some audio source devices have an LED to indicate the battery status. This can be used as a visual indication as to whether audio streaming is in progress.
- Call Forwarding, Call Screening, Call Blocking, DND, and Caller-ID Delivery features are not available on an SAS line.

Configuring the Streaming Audio Server

Use the following procedure to configure an SAS with an external music source.

STEP 1 Connect an RJ-11 adapter between the music source (a CD player or iPod, for example) and an FXS port.

STEP 2 Start Internet Explorer, connect to the administration web server, and choose Admin access with Advanced settings.

STEP 3 Configure the FXS port:

a. Click **Voice tab > FXS *N***, where *N* represents the number of the FXS port where you connected the cable from the external music source.

b. In the *Subscriber Infomation* section, enter the following settings:

- **Display Name:** Enter an extension number of name for the FXS 1 port, such as Receptionist Area Fax Machine.
- **User ID:** Enter a three- to four-digit extension number that is not is use by another extension.

c. In the *Streaming Audio Server (SAS)* section, choose **yes** from the **SAS Enable** drop-down list.

STEP 4 Click **Submit All Changes**.

STEP 5 Configure each phone to use this audio source as the MOH server:

a. Click the **PBX Status** link to view the list of phones.

b. In the list, find the phone that you want to configure, and then click the hyperlink in the *IP Address* column. The Telephone Configuration page appears in a separate window.

c. Click the **Ext 1** tab.

d. Scroll down to the *Call Feature Settings* section.

e. In the *MOH Server* field, enter the extension number that you assigned to the FXS port for the streaming audio server.

f. Click **Submit All Changes**.

g. Close the window for the Telephone Configuration page.

h. Repeat this step to configure each phone, as needed.

Using the IVR with an SAS Line

The IVR can still be used on an SAS line, but the user needs to follow the following steps:

STEP 1 Power off the ATA device.

STEP 2 Connect a phone to the port and make sure the phone is on-hook.

STEP 3 Power on the ATA device.

STEP 4 Pick up handset and press * * * * to invoke IVR in the usual way.

If the ATA device boots and finds that the SAS line is on-hook, it does not remove battery from the line so that IVR may be used. But if the ATA device boots up and finds that the SAS line is off-hook, it removes battery from the line because no audio session is in progress.

6

Configuring the PSTN (FXO) Gateway on the SPA3102

This chapter describes how to configure the PSTN gateway on the SPA3102 and the SPA8800.

- **"Connecting to PSTN and VoIP Services" section on page 92**
- **"How VoIP-To-PSTN Calls Work" section on page 93**
- **"How PSTN-To-VoIP Calls Work" section on page 95**
- **"Configuring VoIP Failover to PSTN" section on page 98**
- **"Sharing One VoIP Account Between the FXS and PSTN Lines (SPA3102)" section on page 98**
- **"Other Options" section on page 99**
- **"Call Scenarios" section on page 100**

Connecting to PSTN and VoIP Services

Both the SPA3102 and the SPA8800 allow your analog and IP phones to participate in calls over the VoIP network and the PSTN. Both devices provide a VoIP-To-PSTN calling function, which is referred to as a *PSTN gateway*, as well as a PSTN-To-VoIP calling function, which is referred to as a *VoIP gateway*.

These ATAs function somewhat differently because they are designed to meet different business needs.

- The SPA3102 is designed to work independently as a PSTN gateway and VoIP gateway, without relying on a PBX for call control.
  - FXS Port: The SPA3102 has 1 FXS port that you can connect to a standard analog telephone or fax machine. Configure the FXS settings by using the SPA3102 Line page.

  - FXO Port: The SPA3102 has 1 FXO port that you can connect to the PSTN. Configure the FXO settings by using the SPA3102 PSTN Line page.

- The SPA8800 is designed to work with your PBX as a PSTN gateway and a VoIP gateway. Call control is provided by a standard PBX, an Asterisk-based IP PBX, the SPA9000 Voice System, or an Internet-based call control system.
  - FXS Port: The SPA8800 has 4 FXS ports that you can connect to standard analog telephones or fax machines. Configure the FXS settings by using the SPA8800 Phone 1-4 pages.
  - FXO Port: The SPA8800 has 4 FXO port sthat you can connect to the PSTN. Configure the FXO settings by using the SPA8800 Line 1-4 pages.

How VoIP-To-PSTN Calls Work

To obtain PSTN services through the SPA3102 or the SPA8800, the VoIP caller establishes a connection with the PSTN Line by way of a standard SIP INVITE request addressed to the PSTN Line.

One-Stage Dialing (SPA3102 and SPA8800)

One-stage dialing allows a call to be started over VoIP and then immediately get a dial tone on the PSTN. When you take a phone off hook and dial a number, the call is automatically routed to the VoIP or the PSTN, based on the dial plan.

On the SPA3102, you can enable HTTP Digest Authentication. In this case, the SPA3102 challenges the INVITE with a 401 response if it does not have a valid Authorization header. The Authorization header should include a <*User ID n*> parameter, where n refers to one of eight VoIP user accounts that can be configured on the ATA device. The credentials are computed based on the corresponding password using Message Digest 5 (MD5). The <*User ID n*> parameter must match one of the VoIP accounts stored on the ATA device. You can configure these settings on the Voice tab > PSTN Line page. For more information, see **"VoIP Users and Passwords (HTTP Authentication) section," on page 212**.

Two-Stage Dialing (SPA3102)

In two-stage dialing, the SPA3102 takes the FXO port off-hook but does not automatically dial any digits after accepting the call. To invoke two-stage dialing, the VoIP caller should INVITE the PSTN Line without the user-id in the Request-URI or with a user-id that matches exactly the <*User ID n*> of the PSTN Line. A different user-id in the Request-URI is treated as a request for one-stage dialing if one-stage dialing is enabled, or dropped by the SPA3102 (as if no user-id is given) if one-stage dialing is disabled.

HTTP Digest Authentication can be also used for two-stage dialing, as in one-stage dialing. If using HTTP Digest Authentication or Authentication is disabled, the VoIP caller should hear the PSTN dial tone right after the call is answered (by a SIP 200 response).

You also can enable PIN authentication. In this case, the VoIP caller is prompted to enter a PIN number after the SPA3102 answers the call. The PIN number must end with a # key. The inter-PIN-digit timeout is 10 seconds (not configurable). Up to eight VoIP caller PIN numbers can be configured on the SPA3102. A dial plan can be selected for each PIN number. If the caller enters a wrong PIN or the SPA3102 times out waiting for more PIN digits, the SPA3102 tears down the call immediately with a BYE request.

The call scenarios may involve the following types of callers:

- VoIP caller—Someone who calls the ATA device via VoIP to obtain PSTN service
- VoIP user—A VoIP caller that has a user account (user-id and password) on the SPA3102
- PSTN caller—Someone who calls the ATA device from the PSTN to obtain VoIP service

VoIP callers can be authenticated by one of the following methods:

- No Authentication—All callers are accepted for service.
- PIN—Caller is prompted to enter a PIN right after the call is answered.
- HTTP digest—SIP INVITE must contain a valid authorization header.

PSTN callers can be authenticated by one of the following methods:

- No authentication—All callers are accepted for service.
- PIN—Caller is prompted to enter a PIN right after the call is answered.

NOTE When the source address of the INVITE is 127.0.0.1, authentication is automatically disabled because this is a call by the local user. This applies to both one-stage and two-stage dialing.

These settings can be configured on the SPA3102 PSTN Line page. See **"VoIP-To-PSTN Gateway Setup section," on page 210**.

How PSTN-To-VoIP Calls Work

For PSTN-to-VoIP calls, the basic PSTN-to-VoIP call flow is as follows:

1. When a PSTN call comes in to the ATA device and is unanswered (after a configurable number of rings), then the ATA device takes the FXO port off hook.
2. The ATA device plays dial tone.
3. The PSTN caller enters the target telephone number. The collected digits are processed by the default dial plan.

On the SPA3102, you can add PIN authentication to the basic flow:

1. When a PSTN call comes in to the ATA device and is unanswered (after a configurable number of rings), then the ATA device takes the FXO port off hook.
2. The SPA3102 prompts the caller to enter the PIN number followed by the # key.
3. The SPA3102 compares the PIN to the configured PSTN PIN values.
   - If the PIN matches one of the configured PSTN PIN values, then the SPA3102 plays dial tone. The caller enters the telephone number and the collected digits are processed by the dial plan associated with the PIN number. (These dial plans are configured on the Voice Voice tab > PSTN Line page, Dial Plans section.)
   - If the PIN does not match one of the configured PSTN PIN values, then the ATA device plays the reorder tone and then takes the FXO port on-hook.

NOTE For information about configuring the timer values for the above scenarios, see **"FXO (PSTN) Timer Values (sec) section," on page 213**.

For information about configuring caller authentication on the SPA3102, see **"VoIP-To-PSTN Gateway Setup section," on page 210**.

Terminating Gateway Calls

There are two call legs in a PSTN gateway call: the PSTN call leg and the VoIP call leg. A gateway call is terminated when either call leg is ended. When the call terminates, the FXO port goes on-hook so the PSTN line is available for use. The ATA device detects that the PSTN call leg is ended when one of the following conditions occurs during a call:

- The PSTN Line voltage drops to a very low value (this occurs if the line is disconnected from the PSTN service or if the PSTN switch provides a CPC signal).
- A polarity reversal or disconnect tone is detected at the FXO port.
- There is no voice activity for a configurable period of time in either direction at the FXO port.

When any of the above conditions occur, the ATA device takes the FXO port on hook and sends a BYE request to end the VoIP call leg. On the other hand, when the ATA device receives a SIP BYE from the VoIP during a call, it takes the FXO port on hook to end the PSTN call leg.

In addition, the ATA device can also send a refresh signal periodically to the VoIP call leg to determine whether the call leg is still up. If a refresh operation fails, the ATA device ends both call legs.

On the SPA3102, these settings can be configured on the Voice tab > PSTN Line page. For more information, see **"PSTN Disconnect Detection section," on page 215**.

On the SPA8800, these settings can be configured on the Voice tab > Phone page. For more information, see **"FXS Port Polarity Configuration section," on page 182**.

VoIP Outbound Call Routing (SPA3102)

On the SPA3102, calls made from Line 1 are routed through the configured Line 1 service provider, by default. You can override this behavior by IP dialing, through which the calls can be routed to any IP address that the user enters. The SPA3102 allows flexible call routing with four sets of gateway parameters and configurable dial plans. These settings are configured on the SPA3102 Voice tab > Line page. See **"Gateway Accounts section (SPA3102)," on page 179**.

NOTE The PBX handles outbound call routing for the SPA8800.

You can specify Gateways 1 to 4 in a dial plan by using the identifiers gw1, gw2, gw3, or gw4. Also, gw0 represents the internal PSTN gateway via the FXO port. You can specify in the dial plan to use gw$x$ (x = 0,1,2,3,4) when making certain calls. In general, you can specify any gateway address in the dial plan. In addition, three parameters are added that can be used with call routing:

- usr: User-id used for authentication with the given gateway
- pwd: Password used for authentication with the given gateway
- nat: Enable or disable NAT mapping when calling the gateway

The following table lists some examples.

Example	Description
`<9,:>xx.<:@gw1`	Dial 9 to start outside dial tone, followed by one or more digits, and route the call to Gateway 1.
`[93]11<:@gw0>`	Route 911 and 311 calls to the local PSTN gateway
`<8,:1408>xxxxxxx<:@pstn.cisco.com:5061;usr=joe;pwd=joe_pwd;nat>`	Dial 8 to start outside dial tone, prepend 1408 followed by seven digits, and route the call to pstn.cisco.com:5061, with user-id = joe, and pwd = bell_pwd, and enable NAT mapping
`<8,:1408>xxxxxxx<:@gw2:5061;usr="Alex Bell";pwd="anything";nat=no>`	Dial 8 to start outside dial tone, prepend 1408 followed by seven digits, and route the call to Gateway 2, but use the given port, user-id, and password, and no pstn.cisco.com:5061, and with user-id = "Alex Bell" and pwd = bell_pwd, and disable NAT mapping

You can set up multiple PSTN gateways at different locations and configure Line 1 to use a different gateway when dialing specific numbers.

Configuring VoIP Failover to PSTN

When power is disconnected from the ATA, the FXS port is connected to the FXO port. In this case, the telephone attached to the FXS port is electrically connected to the PSTN service via the FXO port. When power is applied to the ATA device, the FXS port is disconnected from the FXO port. However, if the PSTN line is in use when the power is applied to the ATA device, the relay is not flipped until the PSTN line is released. This feature ensures that the ATA device does not interrupt any call in progress on the PSTN line.

When Line 1 VoIP service is down (because of registration failure or loss of network link), the ATA device can be configured to automatically route all outbound calls to the internal gateway using the parameter listed below.

For SPA3102, you can configure this setting on the Voice tab > Line page. For SPA8800, you can configure this setting on the Voice tab > Phone page. For more information, see **"VoIP Fallback to PSTN section (SPA3102 and SPA8800)," on page 180**.

Sharing One VoIP Account Between the FXS and PSTN Lines (SPA3102)

On the SPA3102, both the FXS (Line 1) and FXO (PSTN Line) can receive incoming calls for a single VoIP account if they are different ports. Consider the following points:

- If the service provider allows multiple registration contacts and simultaneous ringing, both lines can register periodically with the service provider. In this case, both lines receive inbound calls to this VoIP account. The PSTN Line should be configured with a sufficiently long answer delay before the call is automatically answered to allow for the function of the PSTN gateway.
- If the service provider does not allow more than one register contact, the PSTN Line should not register. In this case, only Line 1 rings on the inbound call to this VoIP account because it is the only line registered with the service provider.

- Line 1 can have the call forwarded to the PSTN Line after a few seconds using the Call-Forward-On-No-Answer feature with gw0 as the forward destination. Similarly, Line 1 can apply Call-Forward-All, Call-Forward-On-Busy, and Call-Forward-Selective feature, and direct the caller to the PSTN-Gateway.
- Only PIN authentication is allowed when a VoIP caller is forwarded to the PSTN-gateway from Line 1. If HTTP Authentication is used, the caller is not authenticated.
- When using the Forward-To-GW0 feature, you can forward the caller to a specific PSTN number, using the syntax <*PSTN-number*>@gw0 in the forward destination. When using this with Call-Forward-Selective, you can develop some interesting applications. For example, you can forward all callers with 408 area code to 14081234567, or all callers with 800 area code to 18005558355 (This is the number for Tell Me). When this syntax is used, authentication is not used and the target PSTN number is automatically dialed by the ATA device after the caller is forwarded to gw0.

Other Options

This section describes other options provided by the SPA3102 and the SPA8800:

- **"PSTN Call to Ring Line 1 (SPA3102)" section on page 99**
- **"Symmetric RTP (SPA3102 and SPA8800)" section on page 99**
- **"Call Progress Tones (SPA3102 and SPA8800)" section on page 100**

PSTN Call to Ring Line 1 (SPA3102)

On the SPA3102, this feature allows a PSTN caller to ring Line 1. When the PSTN line rings, the PSTN Line makes a local VoIP call to Line 1. If Line 1 is busy, it stops. After a given number of rings, the VoIP gateway picks up the call.

Symmetric RTP (SPA3102 and SPA8800)

The *Symmetric RTP* parameter is used to send audio RTP to the source IP and port of the inbound RTP packets. This facilitates NAT traversal. See **"SIP Parameters section," on page 127**.

Call Progress Tones (SPA3102 and SPA8800)

The SPA3102 and the SPA8800 have configurable call progress tones. Call progress tones are generated locally on the ATA, so an end user is advised of status (such as ringback). Parameters for each type of tone (for instance a dial tone played back to an end user) may include the following specifications:

- Number of frequency components
- Frequency and amplitude of each component
- Cadence information

When one VoIP account is shared between the FXS and PSTN Lines, the following parameters are recommended to be set. For more information, see the Regional page in the **"ATA Voice Field Reference," on page 115**.

Call Progress Tone	Description
VoIP PIN Tone	This tone is played to prompt a VoIP caller to enter a PIN number.
PSTN PIN Tone	This tone is played to prompt a PSTN caller to enter a PIN number.
Outside Dial Tone	During two-stage PSTN-gateway dialing and with a dial plan assigned, the ATA device collects digits from the VoIP caller and processes the number using the dial plan. The ATA device plays the *Outside Dial Tone* to prompt the VoIP caller to enter the PSTN number. This tone should be specified to sound different from the PSTN dial tone.

Call Scenarios

This section describes some typical scenarios where the ATA device can be applied. Some terms are introduced in the first few sections and reused in later sections. This section includes the following topics:

- **"PSTN to VoIP Call with and Without Ring-Thru" section on page 101**
- **"VoIP to PSTN Call With and Without Authentication" section on page 101**
- **"Call Forwarding to PSTN Gateway (SPA3102 and SPA8800)" section on page 103**

PSTN to VoIP Call with and Without Ring-Thru

The PSTN caller calls the PSTN line connected to the FXO port. Ring-Thru is disabled. After the call rings for a delay equal to the value in *PSTN Answer Delay*, the VoIP gateway answers the call and prompts the PSTN caller to enter a PIN number (assuming PIN authentication is enabled). After a valid PIN is entered, the caller is prompted to dial the VoIP number. A dial plan is selected according to the PIN number entered by the caller. If authentication is disabled, the default PSTN dial plan is used. Note than the dial plan choice cannot be 0 for a PSTN caller.

NOTE A *PSTN Access List* in terms of Caller ID (ANI) patterns can be configured into the ATA device to automatically grant access to the PSTN caller without entering the PIN. In this case, the default PSTN dial plan is also used.

The same scenario can be implemented using Ring-Thru. When the PSTN line rings, Line 1 rings also. This feature is called *Ring-Thru*. If Line 1 is picked up before the VoIP gateway auto-answers, it is connected to the PSTN call. Line 1 hears a call waiting tone if it is already connected to another call.

VoIP to PSTN Call With and Without Authentication

This section describes three scenarios with and without authentication and includes the following topics:

- **"Using PIN Authentication (SPA3102)" section on page 101**
- **"Using HTTP Digest Authentication (SPA3102)" section on page 102**
- **"Without Authentication (SPA3102 and SPA8800)" section on page 103**

Using PIN Authentication (SPA3102)

This scenario assumes that the PSTN Line has a different VoIP account than the Line 1 account. The VoIP caller calls the FXO number, which auto-answers after *VoIP Answer Delay*. The ATA device then prompts the VoIP caller for a PIN. When a valid PIN is entered, the ATA plays the *Outside Dial Tone* and prompts the caller to dial the PSTN number.

The number dialed is processed by the dial plan corresponding to the VoIP caller. If the dial plan choice is 0, no dial plan is needed and the user hears the PSTN dial tone right after the PIN is entered. If the dial plan choice is not 0, the final number returned from the dial plan after the complete number is dialed by the caller is dialed to the PSTN. The caller does not hear the PSTN dial tone (except for a little leakage before the first digit of the final number is auto-dialed by the ATA device).

If the PSTN Line is busy (off-hook, ringing, or PSTN line not connected) when the VoIP caller calls, the ATA device replies with 503. If the PIN number is invalid or entered after the VoIP call leg is connected, the ATA device plays the reorder tone to the VoIP caller and eventually ends the call when the reorder tone times out.

NOTE If *VoIP Caller ID Pattern* is specified and the VoIP caller ID does not match any of the given patterns, the ATA device rejects the call with a 403. This rule applies regardless of the authentication method, even when the source IP address of the INVITE request is in the *VoIP Access List*.

Using HTTP Digest Authentication (SPA3102)

The same scenario can be implemented with HTTP digest authentication when the calling device supports the configuration of a auth-ID and password to access the ATA device PSTN gateway. When the VoIP caller calls the PSTN Line, the ATA device challenges the INVITE request with a 401 response. The calling device should then provide the correct credentials in a subsequent retry of the INVITE, computed with the auth-ID and password using MD5.

If the credentials are correct, the target number specified in the user-id field of the INVITE Request-URI is processed by the dial plan corresponding to the VoIP user (assuming the dial plan choice is not 0). The final number is then auto-dialed by the ATA device.

If the credentials are incorrect, the ATA device challenges the INVITE again. If the auth-ID does not exist in the ATA device configuration, the ATA device replies 403 to the INVITE. If the target number is invalid according to the corresponding dial plan, the ATA device also replies 403 to the INVITE. Again, if the PSTN Line is busy at the time of the call, the ATA device replies 503.

NOTE HTTP Digest Authentication is one way to perform one-stage dialing of a VoIP-To-PSTN call. The other way is with no authentication require. However, if the target number is not specified in the Request-URI or the number matches the account user-id of the PSTN Line, the call reverts to two-stage dialing.

Without Authentication (SPA3102 and SPA8800)

This scenario can also be implemented without authentication, using one-stage or two-stage dialing, as in the HTTP Authentication case. The default VoIP caller dial plan is used in this scenario. Authentication is performed when the method is none or when the source IP address of the inbound INVITE matches one of the *VoIP Access List* patterns.

Call Forwarding to PSTN Gateway (SPA3102 and SPA8800)

This section describes a number of scenarios that forward calls to the PSTN gateway. It includes the following topics:

- **"Forward-On-No-Answer to the PSTN Gateway" section on page 103**
- **"Forward-All to the PSTN gateway" section on page 104**
- **"Forward to a Particular PSTN Number" section on page 104**
- **"Forward-On-Busy to PSTN Gateway or Number" section on page 104**

On the SPA3102, you can configure Call Forward settings on the User page. On SPA8800, the same parameters are set on the Phone page. For field descriptions, see Call Forward Settings section.

Forward-On-No-Answer to the PSTN Gateway

In this scenario, Line 1 is configured to *Cfwd No Ans Dest* to the PSTN Gateway. The scenario is implemented by setting User 1 to forward to gw0 on no answer, with *Cfwd No Ans Delay* set to six seconds.

The caller calls Line 1 and if Line 1 is not picked up after six seconds, the PSTN Line picks up the call and the call reverts to a PSTN-Gateway call, as described above. In this case, HTTP authentication is not allowed because Line 1 does not authenticate inbound INVITE requests. If you need to authenticate the VoIP caller in this case, you must select the PIN authentication method, or else the caller is *not* authenticated.

NOTE If the PSTN Line is busy at the moment of the forward, it does not answer the VoIP call. The call forward rule is ignored and Line 1 continues to ring.

Forward-All to the PSTN gateway

In this scenario, Line 1 is configured with *Cfwd All Dest* parameter to the PSTN gateway.This scenario is the same the previous case, except the FXO picks up the Line 1 call immediately.

If the PSTN Line is busy at the moment of the call, the PSTN Line does not pick up the call, the call forward rule is ignored, and Line 1 continues to ring.

Forward to a Particular PSTN Number

In this scenario, the forward destination is set to *<target-number>@gw0>*. This is the same as in the previous examples, except that the ATA device automatically dials the given target number on the PSTN line right after it answers the VoIP call leg. This is a special case of one-stage dialing where the target number is specified in the configuration. The caller is not authenticated in this case regardless of the authentication method. However, the caller is still limited by the *VoIP Caller ID Pattern* parameter

Forward-On-Busy to PSTN Gateway or Number

This scenario is similar to the previous cases of call forwarding to gw0, but this applies when Line 1 is active.

A

ATA Routing Field Reference

This chapter describes the settings that you can configure under the *Router* and *Network* tabs in the administration web server pages.

NOTE This information applies to the SPA2102, SPA3102, SPA8000, and SPA8800 models. To configure router settings for the PAP2T, and WRTP54G, see the user guide for the router.

After you click the *Router* tab on the SPA2102, SPA3102, or the *Network* tab on the SPA8000 and SPA8800, you can choose the following pages:

- **"Router Status page," on page 105**
- **"WAN Status page," on page 107**
- **"LAN Status page," on page 111**
- **"Application page," on page 112**

NOTE Not all fields listed may be applicable to your ATA device or your setup.

Router Status page

You can use the *Router tab* > *Status* page to view information about the Router. The *Status* page includes the following sections:

- **"Product Information section," on page 106**
- **"System Status section," on page 106**

Router tab > Status page >

Product Information section

Product Name	Model number of the ATA device.
Serial Number	Serial number of the ATA device.
Software Version	Version number of the ATA software.
Hardware Version	Version number of the ATA hardware.
MAC Address	MAC address of the ATA device.
Client Certificate	Status of the client certificate, which authenticates the ATA device for use in the ITSP network.
Customization	For a Remote Configuration (RC) unit, this field indicates whether the unit has been customized or not. Pending indicates a new RC unit that is ready for provisioning. If the unit has already retrieved its customized profile, this field displays the name of the company that provisioned the unit.

Router tab > Status page >

System Status section

Current Time	Current date and time of the system; for example, 10/3/2003 16:43:00.
Elapsed Time	Total time elapsed since the last reboot of the system; for example, 25 days and 18:12:36.
WAN Connection Type	The connection type: DHCP or Static IP.
Current IP	The current IP address assigned to the ATA device.
Host Name	The current IP address assigned to the ATA device.
Domain	The network domain name of the ATA device.
Current Netmask	The network mask assigned to the ATA device.
Current Gateway	The default router assigned to the ATA device.
Primary DNS	The primary DNS server assigned to the ATA device.
Secondary DNS	The secondary DNS server assigned to the ATA device.
LAN IP Address	The address of the router.

Current Time	Current date and time of the system; for example, 10/3/2003 16:43:00.
Broadcast Pkts Sent	Total number of broadcast packets sent.
Broadcast Bytes Sent	Total number of broadcast packets received.
Broadcast Pkts Recv	Total number of broadcast bytes sent.
Broadcast Bytes Recv	Total number of broadcast bytes received and processed.
Broadcast Pkts Dropped	Total number of broadcast packets received but not processed.
Broadcast Bytes Dropped	Total number of broadcast bytes received but not processed.

WAN Status page

You can use the WAN Status page to enter the WAN connection settings. This page includes the following sections:

- **"Internet Connection Settings section," on page 107**
- **"Static IP Settings section," on page 108**
- **"PPPoE Settings section," on page 108**
- **"Optional Settings section," on page 109**
- **"MAC Clone Settings section," on page 110**
- **"Remote Management section," on page 110**
- **"QOS Settings section," on page 110**
- **"VLAN Settings section," on page 111**

Router tab > WAN Setup page >

Internet Connection Settings section

Connection Type	The type of WAN connection. Options are: **DHCP**, **Static IP**, **PPPoE**, **PPPoE / DHCP** (tries PPPoE then DHCP), or **DHCP/ PPPoE** (tries DHCP then PPPoE).

Router tab > WAN Setup page >

Static IP Settings section

Static IP	Static IP address of ATA device, which takes effect if DHCP is disabled. The default is **0.0.0.0**.
NetMask	The NetMask used by ATA device when DHCP is disabled. The default is **255.255.255.0**.
Gateway	The default gateway used by ATA device when DHCP is disabled. The default is **0.0.0.0**.

Router tab > WAN Setup page >

PPPoE Settings section

PPPoE Login Name	The account name assigned by the ISP for connecting on a Point-to-Point Protocol over Ethernet (PPPoE) link.
PPPoE Login Password	The password assigned by the ISP for connecting on a Point-to-Point Protocol over Ethernet (PPPoE) link.
PPPoE Service Name	The service name assigned by the ISP for connecting on a Point-to-Point Protocol over Ethernet (PPPoE) link.

Router tab > WAN Setup page >

Optional Settings section

HostName	The host name of the ATA device.
Domain	The network domain of the ATA device.
Primary DNS	The DNS server that is used by the ATA device. **NOTE:** When DHCP is enabled, you can enter the IP address of a DNS server in addition to DHCP-supplied DNS servers. When DHCP is disabled, enter the primary DNS server. The default is **0.0.0.0**.
Secondary DNS	Sets the secondary DNS server to take over if problems are discovered with the Primary DNS server. **NOTE:** When DHCP is enabled, you can enter the IP address of a primary or secondary DNS server in addition to DHCP-supplied DNS servers. When DHCP is disabled, enter the primary and secondary DNS server. The default is **0.0.0.0**.
DNS Service Order	The method for selecting the DNS server: **Manual** (enter the IP address of the DNS server manually; that is do not look at the DHCP-supplied DNS table), **Manual/ DHCP**, and **DHCP/Manual**.
DNS Query Mode	The mode of DNS query: **parallel** or **sequential**. **NOTE:** With parallel DNS query mode, the ATA device sends the same DNS lookup request to all the DNS servers at the same time, and the first incoming reply is accepted by the ATA device. The default is **parallel**.
Primary NTP Server	The IP address or name of the primary NTP server.
Secondary NTP Server	The IP address or name of the secondary NTP server.

Router tab > WAN Setup page >

MAC Clone Settings section

A MAC address is a 12-digit code assigned to a unique piece of hardware for identification, like a social security number. Some ISPs require you to register a MAC address in order to access the Internet. If you do not wish to re-register the MAC address with your ISP, you may assign the MAC address you have currently registered with your ISP to the router with the MAC Address Clone feature.

Enable MAC Clone Service	To use MAC Address cloning, select **Yes**. Default is **No**.
Cloned MAC Address	Use when your ISP requires a certain MAC address. It's usually the address for your PC.

Router tab > WAN Setup page >

Remote Management section

Enable WAN Web Server	Allows or prevents access to the administration web server from a computer that is not directly connected to the ATA device. Options are **Yes** or **No**. The default value is **Yes**.
WAN Web Server Port	The port that is used for WAN access to the ATA device. The default value is **80**.

Router tab > WAN Setup page >

QOS Settings section

Use Quality of Service (QoS) to assign different priority levels to different types of data transmissions.

QOS Policy	Enable when you want to use QoS. Options are: **Always On** or **On when Phone is Use** (default).
QOS QDisc	Allow QoS Queuing. Options are **None** or **TBF** (token bucket filter). Information can be found at about TBF at: http://lartc.org/howto/lartc.qdisc.classless.html

Maximum Uplink Speed	The maximum bandwidth for LAN to WAN throughput. The default is **128 kbps**.

Router tab > WAN Setup page >

VLAN Settings section

Enable VLAN	Allows (**yes**) or prevents (**no**) VLAN access. **NOTE:** Choose **yes** if your ATA device is connected to a switch that uses VLAN tagging.
VLAN ID	The VLAN tag for the VLAN to which the ATA device is assigned.

LAN Status page

You can use the LAN Status page to view the LAN settings. This page includes the following sections:

- **"Networking Service section," on page 111**
- **"LAN Networking Settings section," on page 112**
- **"Static DHCP Lease Settings section," on page 112**

Router tab > LAN Setup page >

Networking Service section

Networking Service	**NAT**—the unit acts as a router and provides IP addresses to PCs attached to the LAN port. **Bridge**—The unit acts as a switch, a passthrough, and does not give IP addresses.

Router tab > LAN Setup page >

LAN Networking Settings section

Use these network settings when using NAT.

LAN IP Address	IP address of the ATA device on the LAN side.
LAN Subnet Mask	IP address for subnet mask.
Enable DHCP Server	The status of the DHCP server where Yes is enabled and No is disabled.
DHCP Lease Time	Provided by the DHCP Server. IP renewal process begins when the time expires.
DHCP Client Starting IP Address	Initial IP address the DHCP Server provides for PCs attached to the LAN port.
Number of Client IP Addresses	Number IP addresses available for the DHCP Server to provide.

Router tab > LAN Setup page >

Static DHCP Lease Settings section

Use these settings when using a static IP address.

Enable	Options are **Yes** or **No**. Default is **No**.
Host Mac Address	The device's MAC address
Host IP Address	The device's IP address

Application page

You can use the Application page to view the port forward settings and to update the DMZ settings, multicast passthru setting, and system reserved ports range. This page includes the following sections:

- **"Port Forwarding Settings section," on page 113**
- **"DMZ Settings section," on page 113**
- **"Miscellaneous Settings section," on page 114**

- "System Reserved Ports Range section," on page 114

Router tab > Application page >

Port Forwarding Settings section

This feature allows you to set up specialized Internet applications that require port forwarding on a range of ports.

Enable	Options are Yes or No.
Service Name	Any name to call the port forwarding starting port.
Starting Port	The starting port of the port range you wish to forward.
Ending Port	The ending port of the port range you wish to forward.
Protocol	The protocol that is used: TCP, UDP, or BOTH.
Server IP Address	The LAN address of the computer to receive port forwarding.

Router tab > Application page >

DMZ Settings section

The DMZ feature allows one network computer to be exposed to the Internet for use of a special-purpose service such as Internet gaming or video conferencing. DMZ hosting forwards all the ports at the same time to one PC. The Port Forwarding feature is more secure because it only opens the ports you want to have opened, while DMZ hosting opens all the ports of one computer, exposing the computer to the Internet.

Enable DMZ	Any PC whose port is forwarded must have its DHCP client function disabled and should have a new static IP address assigned to it because its address may change when using the DHCP function. To expose one PC, select **Yes**. The default is **No**.
DMZ Host IP Address	Specify the host computer's IP address.

Router tab > Application page >

Miscellaneous Settings section

Multicast Passthru	Used for passing multicast traffic. Options are **disabled**, **inbound**, **outbound**, **inbound and outbound**.

Router tab > Application page >

System Reserved Ports Range section

Starting Port	A port identified as a reserve port and that is not used for NAT translation. That is, if there is a conflict — if port forwarding is set on the same port — then the port forwarding is cancelled. Default is **50000**.
Num of Ports Reserved	Total number of ports reserved. Options are: **256, 512,** and **1024**.

B

ATA Voice Field Reference

This chapter describes the settings that you can configure under the *Voice* tab in the administration web server pages.

NOTE For information about the *Voice* > *Provisioning* tab, see the *SPA Provisioning Guide*.

After you click the *Voice* tab, you can choose the following pages:

- **"Info page," on page 116**
- **"System page," on page 124**
- **"SIP page," on page 127**
- **"Regional page," on page 139**
- **"Line page," on page 160**
- **"Trunk Group page (SPA8000)," on page 190**
- **"PSTN Line page (SPA3102)," on page 198**
- **"User page," on page 220**
- **"PSTN User page (SPA3102)," on page 226**

NOTE Not all fields listed may be applicable to your ATA device or your setup.

Info page

You can use the *Voice tab* > *Info* page to view information about the ATA device. With some variations, depending on the model, this page includes the following sections:

- **"Product Information section," on page 116**
- **"System Status section," on page 117**
- **"Line Status section," on page 117**
- **"System Information section (PAP2T)," on page 120**
- **"PSTN Line Status section (SPA3102)," on page 120**
- **"Trunk Status section (SPA8000)," on page 123**

NOTE The fields on the Info page are read-only and cannot be edited.

Voice tab > *Info page* >

Product Information section

Product Name	Model number/name.
Serial Number	Serial number.
Software Version	Software version number.
Hardware Version	Hardware version number.
MAC Address	MAC address.
Client Certificate	Status of the client certificate, which can indicate if the ATA device has been authorized by your ITSP.
Customization	For a Remote Configuration (RC) unit, this field indicates whether the unit has been customized or not. Pending indicates a new RC unit that is ready for provisioning. If the unit has already retrieved its customized profile, this field displays the name of the company that provisioned the unit.

Voice tab > Info page >

System Status section

Current Time	Current date and time of the system; for example, 10/3/2003 16:43:00.
Elapsed Time	Total time elapsed since the last reboot of the system; for example, 25 days and 18:12:36.
RTP Packets Sent	Total number of RTP packets sent (including redundant packets).
RTP Bytes Sent	Total number of RTP bytes sent.
RTP Packets Recv	Total number of RTP packets received (including redundant packets).
RTP Bytes Recv	Total number of RTP bytes received.
SIP Messages Sent	Total number of SIP messages sent (including retransmissions).
SIP Bytes Sent	Total number of bytes of SIP messages sent (including retransmissions).
SIP Messages Recv	Total number of SIP messages received (including retransmissions).
SIP Bytes Recv	Total number of bytes of SIP messages received (including retransmissions).
External IP	External IP address used for NAT mapping.

Voice tab > Info page >

Line Status section

(PSTN) Hook State	Hook state of the FXO port. Options are either On or Off.
Registration State	Indicates if the line has registered with the SIP proxy.
Last Registration At	Last date and time the line was registered.
Next Registration In	Number of seconds before the next registration renewal.

Message Waiting	Indicates whether you have new voice mail waiting. Options are either Yes or No. The value automatically is set to Yes when a message is received. You also can clear or set the flag manually. Setting this value to Yes can activate stutter tone and VMWI signal. This parameter is stored in long term memory and survives after reboot or power cycle.
Call Back Active	Indicates whether a call back request is in progress. Options are either Yes or No.
Last Called Number	The last number called from the FXO Line.
Last Caller Number	Number of the last caller.
Mapped SIP Port	Port number of the SIP port mapped by NAT.
Call 1 and 2 State	May take one of the following values: ▪ Idle ▪ Collecting PSTN Pin ▪ Invalid PSTN PIN ▪ PSTN Caller Accepted ▪ Connected to PSTN
Call 1 and 2 Tone	Type of tone used by the call.
Call 1 and 2 Encoder	Codec used for encoding.
Call 1 and 2 Decoder	Codec used for decoding.
Call 1 and 2 FAX	Status of the fax pass-through mode.
Call 1 and 2 Type	Direction of the call. May take one of the following values: ▪ PSTN Gateway Call = VoIP-To-PSTN Call ▪ VoIP Gateway Call = PSTN-To-VoIP Call ▪ PSTN To Line 1 = PSTN call ring through and answered by Line 1 ▪ Line 1 Forward to PSTN Gateway = VoIP calls Line 1 then forwarded to PSTN GW ▪ Line 1 Forward to PSTN Number =VoIP calls Line 1 then forwarded to PSTN number ▪ Line 1 To PSTN Gateway ▪ Line 1 Fallback To PSTN Gateway

Call 1 and 2 Remote Hold	Indicates whether the far end has placed the call on hold.
Call 1 and 2 Callback	Indicates whether the call was triggered by a call back request.
Call 1 and 2 Peer Name	Name of the internal phone.
Call 1 and 2 Peer Phone	Phone number of the internal phone.
Call 1 and 2 Call Duration	Duration of the call.
Call 1 and 2 Packets Sent	Number of packets sent.
Call 1 and 2 Packets Recv	Number of packets received.
Call 1 and 2 Bytes Sent	Number of bytes sent.
Call 1 and 2 Bytes Recv	Number of bytes received.
Call 1 and 2 Decode Latency	Number of milliseconds for decoder latency.
Call 1 and 2 Jitter	Number of milliseconds for receiver jitter.
Call 1 and 2 Round Trip Delay	Number of milliseconds for delay.
Call 1 and 2 Packets Lost	Number of packets lost.
Call 1 and 2 Packet Error	Number of invalid packets received.
Call 1 and 2 Mapped RTP Port	The port mapped for Real Time Protocol traffic for Call 1/2.
Call 1 and 2 Media Loopback	Media loopback is used to quantitatively and qualitatively measure the voice quality experienced by the end user.

Voice tab > Info page >

System Information section (PAP2T)

DHCP	Indicates if DHCP is enabled.
Current IP	Displays the current IP address assigned to the ATA device.
Host Name	Displays the current IP address assigned to the ATA device.
Domain	Displays the network domain name of the ATA device.
Current Netmask	Displays the network mask assigned to the ATA device.
Current Gateway	Displays the default router assigned to the ATA device.
Primary DNS	Displays the primary DNS server assigned to the ATA device.
Secondary DNS	Displays the secondary DNS server assigned to the ATA device.

Voice tab > Info page >

PSTN Line Status section (SPA3102)

(PSTN) Hook State	Hook state of the FXO port. Either On or Off.
(PSTN) Line Voltage	The voltage existing on the PSTN line.
(PSTN) Loop Current	The current (milliamperes) existing on the local loop.
Registration State	Indicates if the line has registered with the SIP proxy.
Last Registration At	Last date and time the line was registered.
Next Registration In	Number of seconds before the next registration renewal.
Last Called VoIP Number	The last VoIP number called from the FXO Line.
Last Called PSTN Number	The PSTN number dialed by the SPA (logged only if a non-trivial dial plan is used).
Last VoIP Caller	The last VoIP caller to the FXO Line.
Last PSTN Caller	Name and number of the last PSTN caller.

Last PSTN Disconnect Reason	Reason for SPA hanging up the FXO port. Can be one of the following: ▪ PSTN Disconnect Tone ▪ PSTN Activity Timeout ▪ CPC Signal ▪ Polarity Reversal ▪ VoIP Call Failed ▪ VoIP Call Ended ▪ Invalid VoIP Destination ▪ Invalid PIN ▪ PIN Digit Timeout ▪ VoIP Dialing Timeout ▪ PSTN Gateway Call Timeout ▪ VoIP Gateway Call Timeout
PSTN Activity Timer	Shows the time (ms) before the SPA disconnects the current gateway unless the PSTN side has some audio activity.
Mapped SIP Port	Port number of the SIP port mapped by NAT.
Call Type	May take one of the following values: ▪ PSTN Gateway Call = VoIP-To-PSTN Call ▪ VoIP Gateway Call = PSTN-To-VoIP Call ▪ PSTN To Line 1 = PSTN call ring through and answered by Line 1 ▪ Line 1 Forward to PSTN Gateway = VoIP calls Line 1 then forwarded to PSTN GW ▪ Line 1 Forward to PSTN Number =VoIP calls Line 1 then forwarded to PSTN number ▪ Line 1 To PSTN Gateway ▪ Line 1 Fallback To PSTN Gateway

VoIP State	May take one of the following values: ▪ Idle ▪ Collecting PSTN Pin ▪ Invalid PSTN PIN ▪ PSTN Caller Accepted ▪ Connected to PSTN
PSTN State	May take one of the following values: ▪ Idle ▪ Collecting PSTN Pin ▪ Invalid PSTN PIN ▪ PSTN Caller Accepted ▪ Connected to PSTN
VoIP Tone	Indicates what tone is being played to the VoIP call leg.
PSTN Tone	Indicate what tone is being played to the PSTN call leg.
VoIP Peer Name	Name of the party at the VoIP call leg.
PSTN Peer Name	Name of the party at the PSTN call leg.
VoIP Peer Number	Phone number of the party at the VoIP call leg.
PSTN Peer Number	Phone number of the party at the PSTN call leg.
VoIP Call Encoder	Audio encoder being used for the VoIP call leg.
VoIP Call Decoder	Audio decoder being used for the VoIP call leg.
VoIP Call FAX	Status of the fax pass-through mode.
VoIP Call Remote Hold	Indicates whether the far end has placed the call on hold.
VoIP Call Duration	Duration of the call.
VoIP Call Packets Sent	Number of packets sent.
VoIP Call Packets Recv	Number of packets received.
VoIP Call Bytes Sent	Number of bytes sent.
VoIP Call Bytes Recv	Number of bytes received.

VoIP Call Decode Latency	Number of milliseconds for decoder latency.
VoIP Call Jitter	Number of milliseconds for receiver jitter.
VoIP Call Round Trip Delay	Number of milliseconds for delay.
VoIP Call Packets Lost	Number of packets lost.
VoIP Call Packet Error	Number of invalid packets received.
VoIP Call Mapped RTP Port	The port mapped for Real Time Protocol traffic for Call 1/2.

Voice tab > Info page >

Trunk Status section (SPA8000)

Registration State	Indicates if the line has registered with the SIP proxy.
Last Registration At	Last date and time the line was registered.
Next Registration In	Number of seconds before the next registration renewal.
Message Waiting	Indicates whether you have new voice mail waiting. Options are either Yes or No. This value is updated when voice mail notification is received. You can also manually modify it to clear or set the flag. Setting this value to Yes can activate stutter tone and VMWI signal. This parameter is stored in long term memory and survives after reboot or power cycle.
Mapped SIP Port	Port number of the SIP port mapped by NAT.

System page

You can use the *Voice tab > System* page to configure your system and network connections. With some variations, depending on the model, this page includes the following sections:

- **"System Configuration section" section on page 124**
- **"Internet Connection Type section (PAP2T)" section on page 125**
- **"Optional Network Configuration section (PAP2T)" section on page 125**
- **"Miscellaneous Settings section (not used with PAP2T)" section on page 126**

Voice tab > System page >

System Configuration section

Restricted Access Domains	This feature is used when implementing software customization.
Enable Web Server	Enable/disable web server of the ATA device. This feature should only be used on firmware version 1.0.9 or later. The default is **yes**. This field is only found in the PAP2T.
Web Server Port	Port number of the ATA device administration web server. The default is **80**. This field is only found in the PAP2T.
Enable Web Admin Access	Lets you enable or disable local access to the administration web server. Select yes or no from the drop-down menu. The default is **yes**.
Admin Password	Password for the administrator. The default is no password.
User Password	Password for the user. The default is no password.

Voice tab > System page >

Internet Connection Type section (PAP2T)

DHCP	Enable or disable DHCP. The default is **yes**.
Static IP	Static IP address of ATA device, which takes effect if DHCP is disabled. The default is **0.0.0.0**.
NetMask	The NetMask used by ATA device when DHCP is disabled. The default is **255.255.255.0**.
Gateway	The default gateway used by ATA device when DHCP is disabled. The default is **0.0.0.0**.

Voice tab > System page >

Optional Network Configuration section (PAP2T)

Host Name	The host name of the ATA device.
Domain	The network domain of the ATA device.
Primary DNS	DNS server used by ATA device in addition to DHCP supplied DNS servers if DHCP is enabled; when DHCP is disabled, this is the primary DNS server. The default is **0.0.0.0**.
Secondary DNS	Sets the secondary DNS server to take over if problems are discovered with the Primary DNS server. This is in addition to DHCP-supplied DNS servers if DHCP is enabled; when DHCP is disabled, this is the secondary DNS server. The default is **0.0.0.0**.

DNS Server Order	Specifies the method for selecting the DNS server. The options are **Manual** (enter the IP address of the DNS server manually; that is do not look at the DHCP-supplied DNS table), **Manual/DHCP**, and **DHCP/Manual**.
DNS Query Mode	Do parallel or sequential DNS Query. With parallel DNS query mode, the ATA device sends the same request to all the DNS servers at the same time when doing a DNS lookup, the first incoming reply is accepted by the ATA device. The default is **parallel**.
Syslog Server	Specify the syslog server name and port. This feature specifies the server for logging ATA device system information and critical events. If both Debug Server and Syslog Server are specified, Syslog messages are also logged to the Debug Server.
Debug Server	The debug server name and port. This feature specifies the server for logging ATA device debug information. The level of detailed output depends on the debug level parameter setting.
Debug Level	The higher the debug level, the more debug information is generated. Zero (0) means no debug information is generated. To log SIP messages, Debug Level must be set to at least 2. The default is **0**.
Primary NTP Server	IP address or name of primary NTP server.
Secondary NTP Server	IP address or name of secondary NTP server.

Voice tab > System page >

Miscellaneous Settings section (not used with PAP2T)

Syslog Server	Specifies the IP address of the syslog server.
Debug Server	Specifies the IP address of the debug server, which logs debug information. The level of detailed output depends on the debug level parameter setting.

Debug Level	Determines the level of debug information that is generated. Select **0**, **1**, **2**, or **3** from the drop-down menu. The higher the debug level, the more debug information is generated. The default is **0**, which indicates that no debug information is generated.

SIP page

You can use the *Voice tab > SIP* page to configure the SIP settings. With some variations, depending on the model, this page includes the following sections:

- **"SIP Parameters section" section on page 127**
- **"SIP Timer Values (sec) section" section on page 129**
- **"Response Status Code Handling section" section on page 131**
- **"RTP Parameters section" section on page 132**
- **"SDP Payload Types section" section on page 134**
- **"NAT Support Parameters section" section on page 135**
- **"Trunking Parameters section (SPA8000)" section on page 138**

Voice tab > SIP page >

SIP Parameters section

Max Forward	SIP Max Forward value, which can range from 1 to 255. The default is **70**.
Max Redirection	Number of times an invite can be redirected to avoid an infinite loop. The default is **5**.
Max Auth	Maximum number of times (from 0 to 255) a request may be challenged. The default is **2**.

SIP User Agent Name	User-Agent header used in outbound requests. The default is **$VERSION**. If empty, the header is not included. Macro expansion of $A to $D corresponding to GPP_A to GPP_D allowed.
SIP Server Name	Server header used in responses to inbound responses. The default is **$VERSION**.
SIP Reg User Agent Name	User-Agent name to be used in a REGISTER request. If this value is not specified, the *SIP User Agent Name* parameter is also used for the REGISTER request. The default is blank.
SIP Accept Language	Accept-Language header used. There is no default (this indicates ATA device does not include this header). If empty, the header is not included.
DTMF Relay MIME Type	MIME Type used in a SIP INFO message to signal a DTMF event. The default is **application/dtmf-relay**.
Hook Flash MIME Type	MIME Type used in a SIP INFO message to signal a hook flash event. The default is **application/hook-flash**.
Remove Last Reg	Lets you remove the last registration before registering a new one if the value is different. Select yes or no from the drop-down menu. The default is **no**.
Use Compact Header	Lets you use compact SIP headers in outbound SIP messages. Select yes or no from the drop-down menu. If set to yes, the ATA device uses compact SIP headers in outbound SIP messages. If set to no, the ATA device uses normal SIP headers. If inbound SIP requests contain compact headers, ATA device reuses the same compact headers when generating the response regardless the settings of the *Use Compact Header* parameter. If inbound SIP requests contain normal headers, ATA device substitutes those headers with compact headers (if defined by RFC 261) if *Use Compact Header* parameter is set to yes. The default is **no**.

Escape Display Name	Lets you keep the Display Name private. Select yes if you want the ATA device to enclose the string (configured in the Display Name) in a pair of double quotes for outbound SIP messages. Any occurrences of or \ in the string is escaped with \ and \\ inside the pair of double quotes. Otherwise, select no. The default is **no**.
RFC 2543 Call Hold	Configures the type of call hold: a:sendonly or 0.0.0.0. The default is **no**; do not use the 0.0.0.0 syntax in a HOLD SDP; use the a:sendonly syntax.
Mark All AVT Packets	If set to yes, all AVT tone packets (encoded for redundancy) have the marker bit set. If set to no, only the first packet has the marker bit set for each DTMF event. The default is **yes**.
SIP TCP Port Min	Specifies the lowest TCP port number that can be used for SIP sessions. This field is not found in the PAP2T.
SIP TCP Port Max	Specifies the highest TCP port number that can be used for SIP sessions. This field is not found in the PAP2T.

Voice tab > SIP page >

SIP Timer Values (sec) section

SIP T1	RFC 3261 T1 value (RTT estimate), which can range from 0 to 64 seconds. The default is.**5**.
SIP T2	RFC 3261 T2 value (maximum retransmit interval for non-INVITE requests and INVITE responses), which can range from 0 to 64 seconds. The default is **4**.
SIP T4	RFC 3261 T4 value (maximum duration a message remains in the network), which can range from 0 to 64 seconds. The default is **5**.

SIP Timer B	INVITE time-out value, which can range from 0 to 64 seconds. The default is **32**.
SIP Timer F	Non-INVITE time-out value, which can range from 0 to 64 seconds. The default is **32**.
SIP Timer H	INVITE final response, time-out value, which can range from 0 to 64 seconds. The default is **32**.
SIP Timer D	ACK hang-around time, which can range from 0 to 64 seconds. The default is **32**.
SIP Timer J	Non-INVITE response hang-around time, which can range from 0 to 64 seconds. The default is **32**.
INVITE Expires	INVITE request Expires header value. If you enter 0, the Expires header is not included in the request. The default is **240**. Range: 0–(2^{31}–1).
ReINVITE Expires	ReINVITE request Expires header value. If you enter 0, the Expires header is not included in the request. The default is **30**. Range: 0–(2^{31}–1).
Reg Min Expires	Minimum registration expiration time allowed from the proxy in the Expires header or as a Contact header parameter. If the proxy returns a value less than this setting, the minimum value is used. The default is **1**.
Reg Max Expires	Maximum registration expiration time allowed from the proxy in the Min-Expires header. If the value is larger than this setting, the maximum value is used. The default is **7200.**
Reg Retry Intvl	Interval to wait before the ATA device retries registration after failing during the last registration. The default is **30.**

Reg Retry Long Intvl	When registration fails with a SIP response code that does not match *Retry Reg RSC*, the ATA device waits for the specified length of time before retrying. If this interval is 0, the ATA device stops trying. This value should be much larger than the Reg Retry Intvl value, which should not be 0. The default is **1200**.
Reg Retry Random Delay	Random delay range (in seconds) to add to *Register Retry Intvl* when retrying REGISTER after a failure. The default is **0**, which disables this feature.
Reg Retry Long Random Delay	Random delay range (in seconds) to add to *Register Retry Long Intvl* when retrying REGISTER after a failure. The default is **0**, which disables this feature.
Reg Retry Intvl Cap	The maximum value to cap the exponential back-off retry delay (which starts at *Register Retry Intvl* and doubles on every REGISTER retry after a failure). In other words, the retry interval is always at *Register Retry Intvl* seconds after a failure. If this feature is enabled, *Reg Retry Random Delay* is added on top of the exponential back-off adjusted delay value. The default value is **0**, which disables the exponential back-off feature.

Voice tab > SIP page >

Response Status Code Handling section

SIT1 RSC	SIP response status code for the appropriate Special Information Tone (SIT). For example, if you set the SIT1 RSC to 404, when the user makes a call and a failure code of 404 is returned, the SIT1 tone is played. **Reorder** or **Busy** tone is played by default for all unsuccessful response status code for SIT 1 RSC through SIT 4 RSC.
SIT2 RSC	SIP response status code to INVITE on which to play the SIT2 Tone.
SIT3 RSC	SIP response status code to INVITE on which to play the SIT3 Tone.

SIT4 RSC	SIP response status code to INVITE on which to play the SIT4 Tone.
Try Backup RSC	SIP response code that retries a backup server for the current request.
Retry Reg RSC	Interval to wait before the ATA device retries registration after failing during the last registration. The default is **30**.

Voice tab > SIP page >

RTP Parameters section

RTP Port Min	Minimum port number for RTP transmission and reception. The *RTP Port Min* and *RTP Port Max* parameters should define a range that contains at least 4 even number ports, such as 100 – 106. The default is **16384**.
RTP Port Max	Maximum port number for RTP transmission and reception. The default is **16482**.
RTP Packet Size	Packet size in seconds, which can range from 0.01 to 0.16. Valid values must be a multiple of 0.01 seconds. The default is **0.030**.
Max RTP ICMP Err	Number of successive ICMP errors allowed when transmitting RTP packets to the peer before the ATA device terminates the call. If value is set to 0, the ATA device ignores the limit on ICMP errors. The default is **0**.

RTCP Tx Interval	Interval for sending out RTCP sender reports on an active connection. It can range from 0 to 255 seconds. During an active connection, the ATA device can be programmed to send out compound RTCP packet on the connection. Each compound RTP packet except the last one contains a SR (Sender Report) and a SDES.(Source Description). The last RTCP packet contains an additional BYE packet. Each SR except the last one contains exactly 1 RR (Receiver Report); the last SR carries no RR. The SDES contains CNAME, NAME, and TOOL identifiers. The CNAME is set to <User ID>@<Proxy>, NAME is set to <Display Name> (or Anonymous if user blocks caller ID), and TOOL is set to the Vendor/Hardware-platform-software-version (such as Cisco/ATA device-1.0.3 1(b)). The NTP timestamp used in the SR is a snapshot of the ATA device's local time, not the time reported by an NTP server. If the ATA device receives a RR from the peer, it attempts to compute the round trip delay and show it as the <Call Round Trip Delay> value (ms) in the Info section of ATA device web page. The default is **0**.
No UDP Checksum	Select yes if you want the ATA device to calculate the UDP header checksum for SIP messages. Otherwise, select no. The default is **no**.
Stats In BYE	Determines whether the ATA device includes the P-RTP-Stat header or response to a BYE message. The header contains the RTP statistics of the current call. Select yes or no from the drop-down menu. The format of the P-RTP-Stat header is: P-RTP-State: PS=<packets sent>,OS=<octets sent>,PR=<packets received>,OR=<octets received>,PL=<packets lost>,JI=<jitter in ms>,LA=<delay in ms>,DU=<call duration in s>,EN=<encoder>,DE=<decoder>. The default is **no**.

Voice tab > SIP page >

SDP Payload Types section

NSE Dynamic Payload	NSE dynamic payload type. The valid range is 96-127. The default is **100**.
AVT Dynamic Payload	AVT dynamic payload type. The valid range is 96-127. The default is **101**.
INFOREQ Dynamic Payload	INFOREQ dynamic payload type. There is no default.
G726r16 Dynamic Payload	G.726-16 dynamic payload type. The valid range is 96-127. The default is **98**.
G726r24 Dynamic Payload	G.726-24 dynamic payload type. The valid range is 96-127. The default is **97**.
G726r40 Dynamic Payload	G.726-40 dynamic payload type. The valid range is 96-127. The default is **96**.
G729b Dynamic Payload	G.729b dynamic payload type. The valid range is 96-127. The default is **99**.
NSE Codec Name	NSE codec name used in SDP. The default is **NSE**.
AVT Codec Name	AVT codec name used in SDP. The default is **telephone-event**.
G711u Codec Name	G.711u codec name used in SDP. The default is **PCMU**.
G711a Codec Name	G.711a codec name used in SDP. The default is **PCMA**.
G726r16 Codec Name	G.726-16 codec name used in SDP. The default is **G726-16.**
G726r24 Codec Name	G.726-24 codec name used in SDP. The default is **G726-24**.

G726r32 Codec Name	G.726-32 codec name used in SDP. The default is **G726-32**.
G726r40 Codec Name	G.726-40 codec name used in SDP. The default is **G726-40**.
G729a Codec Name	G.729a codec name used in SDP. The default is **G729a**.
G729b Codec Name	G.729b codec name used in SDP. The default is **G729ab**.
G723 Codec Name	G.723 codec name used in SDP. The default is **G723**.
EncapRTP Codec Name	EncapRTP codec name used in SDP. The default is **EncapRTP**.

Voice tab > SIP page >

NAT Support Parameters section

Handle VIA received	If you select yes, the ATA device processes the received parameter in the VIA header (this value is inserted by the server in a response to anyone of its requests). If you select no, the parameter is ignored. Select **yes** or **no** from the drop-down menu. The default is **no**.
Handle VIA rport	If you select yes, the ATA device processes the rport parameter in the VIA header (this value is inserted by the server in a response to anyone of its requests). If you select no, the parameter is ignored. Select **yes** or **no** from the drop-down menu. The default is **no**.
Insert VIA received	Inserts the received parameter into the VIA header of SIP responses if the received-from IP and VIA sent-by IP values differ. Select yes or no from the drop-down menu. The default is **no**.

Insert VIA rport	Inserts the parameter into the VIA header of SIP responses if the received-from IP and VIA sent-by IP values differ. Select yes or no from the drop-down menu. The default is **no**.
Substitute VIA Addr	Lets you use NAT-mapped IP:port values in the VIA header. Select yes or no from the drop-down menu. The default is **no**.
Send Resp To Src Port	Sends responses to the request source port instead of the VIA sent-by port. Select yes or no from the drop-down menu. The default is **no**.
STUN Enable	Enables the use of STUN to discover NAT mapping. Select yes or no from the drop-down menu. The default is **no**.
STUN Test Enable	If the STUN Enable feature is enabled and a valid STUN server is available, the ATA device can perform a NAT-type discovery operation when it powers on. It contacts the configured STUN server, and the result of the discovery is reported in a Warning header in all subsequent REGISTER requests. If the ATA device detects symmetric NAT or a symmetric firewall, NAT mapping is disabled. The default is **no**.
STUN Server	IP address or fully-qualified domain name of the STUN server to contact for NAT mapping discovery.
EXT IP	External IP address to substitute for the actual IP address of the ATA device in all outgoing SIP messages. If 0.0.0.0 is specified, no IP address substitution is performed. If this parameter is specified, the ATA device assumes this IP address when generating SIP messages and SDP (if NAT Mapping is enabled for that line). However, the results of STUN and VIA received parameter processing, if available, supersede this statically configured value. The default is **0.0.0.0**.

EXT RTP Port Min	External port mapping number of the RTP Port Min. number. If this value is not zero, the RTP port number in all outgoing SIP messages is substituted for the corresponding port value in the external RTP port range. The default is **0**.
NAT Keep Alive Intvl	Interval between NAT-mapping keep alive messages. The default is **15**.

Voice tab > SIP page >

Trunking Parameters section (SPA8000)

The trunking parameters apply to the Trunk Groups that you configure on the Trunk Group pages. SIP Trunking is available on the SPA8000 only.

Proxy Debug Option	This feature controls which proxy debuy messages to log. The choices are as follows: ▪ **none**—No logging. ▪ **1-line**—Logs the start-line only for all messages. ▪ **1-line excl. OPT**—Logs the start-line only for all messages except OPTIONS requests/responses. ▪ **1-line excl. NTFY**—Logs the start-line only for all messages except NOTIFY requests/responses. ▪ **1-line excl. REG**—Logs the start-line only for all messages except REGISTER requests/responses. ▪ **1-line excl. OPT|NTFY|REG**—Logs the start-line only for all messages except OPTIONS, NOTIFY, and REGISTER requests/responses. ▪ **full**—Logs all SIP messages in full text. ▪ **full excl. OPT**—Logs all SIP messages in full text except OPTIONS requests/responses. ▪ **full excl. NTFY**—Logs all SIP messages in full text except NOTIFY requests/responses. ▪ **full excl. REG**—Logs all SIP messages in full text except REGISTER requests/responses. ▪ **full excl. OPT|NTFY|REG**—Logs all SIP messages in full text except for OPTIONS, NOTIFY, and REGISTER requests/responses. The default is none.

Hunt Policy	This parameter can be used to modify the hunting behavior for trunk lines, based on the call state of the trunk lines that are specified in the *Voice tab > Trunk* page, *Contact List* field. The following options are available: ▪ onhook only: An incoming call is directed to a specified trunk line only if the call state is onhook. ▪ any state: An incoming call is directed to any specified trunk line without regard to the call state.

Regional page

You can use the *Voice tab > Regional* page to localize your system with the appropriate regional settings. With some variations, depending on the model, this page includes the following sections:

- **"Call Progress Tones section" section on page 140**
- **"Distinctive Ring Patterns section" section on page 142**
- **"Distinctive Call Waiting Tone Patterns section" section on page 143**
- **"Distinctive Ring/CWT Pattern Names section" section on page 144**
- **"Ring and Call Waiting Tone Spec section" section on page 145**
- **"Control Timer Values (sec) section" section on page 146**
- **"Vertical Service Activation Codes section" section on page 148**
- **"Vertical Service Announcement Codes section (SPA2102, SPA8000)" section on page 154**
- **"Outbound Call Codec Selection Codes section" section on page 154**
- **"Miscellaneous section" section on page 156**

Voice tab > Regional page >

Call Progress Tones section

Dial Tone	Prompts the user to enter a phone number. Reorder Tone is played automatically when *Dial Tone* or any of its alternatives times out. The default is **350@-19,440@-19;10(*/0/1+2)**.
Second Dial Tone	Alternative to the Dial Tone when the user dials a three-way call. The default is **420@-19,520@-19;10(*/0/1+2)**.
Outside Dial Tone	Alternative to the Dial Tone. It prompts the user to enter an external phone number, as opposed to an internal extension. It is triggered by a, (comma) character encountered in the dial plan. The default is **420@-19;10(*/0/1)**.
Prompt Tone	Prompts the user to enter a call forwarding phone number. The default is **520@-19,620@-19;10(*/0/1+2)**.
Busy Tone	Played when a 486 RSC is received for an outbound call. The default is **480@-19,620@-19;10(.5/.5/1+2)**.
Reorder Tone	Played when an outbound call has failed or after the far end hangs up during an established call. Reorder Tone is played automatically when *Dial Tone* or any of its alternatives times out. The default is **480@-19,620@-19;10(.25/.25/1+2)**.
Off Hook Warning Tone	Played when the caller has not properly placed the handset on the cradle. Off Hook Warning Tone is played when Reorder Tone times out. The default is **480@10,620@0;10(.125/.125/1+2)**.
Ring Back Tone	Played during an outbound call when the far end is ringing. The default is **440@-19,480@-19;*(2/4/1+2)**.

Ring Back 2 Tone	Your ATA device plays this ringback tone instead of *Ring Back Tone* if the called party replies with a SIP 182 response without SDP to its outbound INVITE request. The default value is the same as *Ring Back Tone*, except the cadence is 1s on and 1s off. The default is **440@-19,480@-19;*(1/1/1+2)**.
Confirm Tone	Brief tone to notify the user that the last input value has been accepted. The default is **600@-16; 1(.25/.25/1)**.
SIT1 Tone	Alternative to the Reorder Tone played when an error occurs as a caller makes an outbound call. The RSC to trigger this tone is configurable on the SIP screen. The default is **985@-16,1428@-16,1777@-16;20(.380/0/1,.380/0/2,.380/0/3,0/4/0)**.
SIT2 Tone	Alternative to the Reorder Tone played when an error occurs as a caller makes an outbound call. The RSC to trigger this tone is configurable on the SIP screen. The default is **914@-16,1371@-16,1777@-16;20(.274/0/1,.274/0/2,.380/0/3,0/4/0)**.
SIT3 Tone	Alternative to the Reorder Tone played when an error occurs as a caller makes an outbound call. The RSC to trigger this tone is configurable on the SIP screen. The default is **914@-16,1371@-16,1777@-16;20(.380/0/1,.380/0/2,.380/0/3,0/4/0**).
SIT4 Tone	Alternative to the Reorder Tone played when an error occurs as a caller makes an outbound call. The RSC to trigger this tone is configurable on the SIP screen. The default is **985@-16,1371@-16,1777@-16;20(.380/0/1,.274/0/2,.380/0/3,0/4/0)**.
MWI Dial Tone	Played instead of the Dial Tone when there are unheard messages in the caller's mailbox. The default is **350@-19,440@-19;2(.1/.1/1+2);10(*/0/1+2)**.
Cfwd Dial Tone	Played when all calls are forwarded. The default is **350@-19,440@-19;2(.2/.2/1+2);10(*/0/1+2)**.

Holding Tone	Informs the local caller that the far end has placed the call on hold. The default is **600@-19*(.1/.1/1,.1/.1/1,.1/9.5/1)**.
Conference Tone	Played to all parties when a three-way conference call is in progress. The default is **350@-19;20(.1/.1/1,.1/9.7/1)**.
Secure Call Indication Tone	Played when a call has been successfully switched to secure mode. It should be played only for a short while (less than 30 seconds) and at a reduced level (less than -19 dBm) so it does not interfere with the conversation. The default is **397@-19,507@-19;15(0/2/0,.2/.1/1,.1/2.1/2)**.
VoIP PIN Tone	Specification of the tone played to prompt a VoIP caller for a PIN number (if PIN authentication is selected and the caller requires authentication to use the PSTN gateway). This setting applies to the SPA3102 only. The default is **600@-10;*(0/1/1,.1/.1/1,.1/.1/1,.1/.5/1)**.
PSTN PIN Tone	Specification of the tone played to prompt a PSTN caller for a PIN number (if PIN authentication is selected and the caller requires authentication to use the VoIP gateway). This setting applies to the SPA3102 only. The default is **600@-10;*(0/.7/1,.2/.1/1,.2/.1/1,.2/.5/1)**.
Feature Invocation Tone	Played when a feature is implemented. The default is **350@-16;*(.1/.1/1)**. This field is not found in the PAP2T.

Voice tab > Regional page >

Distinctive Ring Patterns section

Ring1 Cadence	Cadence script for distinctive ring 1. The default is **60(2/4)**.
Ring2 Cadence	Cadence script for distinctive ring 2. The default is **60(.3/.2, 1/.2,.3/4)**.

Ring3 Cadence	Cadence script for distinctive ring 3. The default is **60(.8/.4,.8/4)**.
Ring4 Cadence	Cadence script for distinctive ring 4. The default is **60(.4/.2,.3/.2,.8/4)**.
Ring5 Cadence	Cadence script for distinctive ring 5. The default is **60(.2/.2,.2/.2,.2/.2,1/4)**.
Ring6 Cadence	Cadence script for distinctive ring 6. The default is **60(.2/.4,.2/.4,.2/4)**.
Ring7 Cadence	Cadence script for distinctive ring 7. The default is **60(.4/.2,.4/.2,.4/4)**.
Ring8 Cadence	Cadence script for distinctive ring 8. The default is **60(0.25/9.75)**.
Ring9 Cadence	Cadence script for distinctive ring 9. This field is for the SPA2102 and SPA8000 only. The default is **60(.4/.2,.4/2)**.

Voice tab > Regional page >

Distinctive Call Waiting Tone Patterns section

CWT1 Cadence	Cadence script for distinctive CWT 1. The default is **30(.3/9.7)**.
CWT2 Cadence	Cadence script for distinctive CWT 2. The default is **30(.1/.1, .1/9.7)**.
CWT3 Cadence	Cadence script for distinctive CWT 3. The default is **30(.1/.1, .1/.1, .1/9.3)**.
CWT4 Cadence	Cadence script for distinctive CWT 4. The default is **30(.1/.1, .3/.1, .1/9.5)**.
CWT5 Cadence	Cadence script for distinctive CWT 5. The default is **30(.3/.1,.1/.1,.3/9.1)**.

CWT6 Cadence	Cadence script for distinctive CWT 6. The default is **30(.3/.1,.3/.1,.1/9.1).**
CWT7 Cadence	Cadence script for distinctive CWT 7. The default is **30(.1/.1, .3/.1, .1/9.3)**.
CWT8 Cadence	Cadence script for distinctive CWT 8. The default is **2.3(.3/2).**
CWT9 Cadence	Cadence script for distinctive CWT 9. This field is for the SPA2102 only. The default is **30(.3/9.7)**.

Voice tab > Regional page >

Distinctive Ring/CWT Pattern Names section

Ring1 Name	Name in an INVITE's Alert-Info Header to pick distinctive ring/CWT 1 for the inbound call. The default is **Bellcore-r1**.
Ring2 Name	Name in an INVITE's Alert-Info Header to pick distinctive ring/CWT 2 for the inbound call. The default is **Bellcore-r2**.
Ring3 Name	Name in an INVITE's Alert-Info Header to pick distinctive ring/CWT 3 for the inbound call. The default is **Bellcore-r3**.
Ring4 Name	Name in an INVITE's Alert-Info Header to pick distinctive ring/CWT 4 for the inbound call. The default is **Bellcore-r4**.
Ring5 Name	Name in an INVITE's Alert-Info Header to pick distinctive ring/CWT 5 for the inbound call. The default is **Bellcore-r5**.
Ring6 Name	Name in an INVITE's Alert-Info Header to pick distinctive ring/CWT 6 for the inbound call. The default is **Bellcore-r6**.

Ring7 Name	Name in an INVITE's Alert-Info Header to pick distinctive ring/CWT 7 for the inbound call. The default is **Bellcore-r7**.
Ring8 Name	Name in an INVITE's Alert-Info Header to pick distinctive ring/CWT 8 for the inbound call. The default is **Bellcore-r8**.
Ring9 Name	Name in an INVITE's Alert-Info Header to pick distinctive ring/CWT 9 for the inbound call. This field is for the SPA2102 only. The default is **Bellcore-r9**.

Voice tab > Regional page >

Ring and Call Waiting Tone Spec section

IMPORTANT: Ring and Call Waiting tones don't work the same way on all phones. When setting ring tones, consider the following recommendations:

- Begin with the default Ring Waveform, Ring Frequency, and Ring Voltage.
- If your ring cadence doesn't sound right, or your phone doesn't ring, change your Ring Waveform, Ring Frequency, and Ring Voltage to the following:
  - Ring Waveform: Sinusoid
  - Ring Frequency: 25
  - Ring Voltage: 80V

Field	Description
Ring Waveform	Waveform for the ringing signal. Choices are **Sinusoid** or **Trapezoid**. The default is **Trapezoid**.
Ring Frequency	Frequency of the ringing signal. Valid values are 10–100 (Hz). The default is **20**.
Ring Voltage	Ringing voltage. Choices are **60–90** (V). The default is **85**.

CWT Frequency	Frequency script of the call waiting tone. All distinctive CWTs are based on this tone. The default is **440@-10**.
Synchronized Ring	If this is set to **Yes**, when a device calls the Linksys ATA, both lines ring at the same time (similar to a regular PSTN line). After one line answers, the other stops ringing. This field is only found in the PAP2T. **No** is the default.

Voice tab > Regional page >

Control Timer Values (sec) section

Hook Flash Timer Min	Minimum on-hook time before off-hook qualifies as hook-flash. Less than this the on-hook event is ignored. Range: 0.1–0.4 seconds. The default is **0.1**.
Hook Flash Timer Max	Maximum on-hook time before off-hook qualifies as hook-flash. More than this the on-hook event is treated as on-hook (no hook-flash event). Range: 0.4–1.6 seconds. The default is **0.9**.
Callee On Hook Delay	Phone must be on-hook for at this time in sec before the ATA device will tear down the current inbound call. It does not apply to outbound calls. Range: 0–255 seconds. The default is **0**.
Reorder Delay	Delay after far end hangs up before reorder tone is played. 0 = plays immediately, inf = never plays. Range: 0–255 seconds. The default is **5**.
Call Back Expires	Expiration time in seconds of a call back activation. Range: 0–65535 seconds. The default is **1800**.
Call Back Retry Intvl	Call back retry interval in seconds. Range: 0–255 seconds. The default is **30**.

Call Back Delay	Delay after receiving the first SIP 18x response before declaring the remote end is ringing. If a busy response is received during this time, the ATA device still considers the call as failed and keeps on retrying. The default is **0.5**.
VMWI Refresh Intvl	Interval between VMWI refresh to the CPE. The default is **0.5**.
Interdigit Long Timer	Long timeout between entering digits when dialing. The interdigit timer values are used as defaults when dialing. The Interdigit_Long_Timer is used after any one digit, if all valid matching sequences in the dial plan are incomplete as dialed. Range: 0–64 seconds. The default is **10**.
Interdigit Short Timer	Short timeout between entering digits when dialing. The Interdigit_Short_Timer is used after any one digit, if at least one matching sequence is complete as dialed, but more dialed digits would match other as yet incomplete sequences. Range: 0–64 seconds. The default is **3**.
CPC Delay	Delay in seconds after caller hangs up when the ATA device starts removing the tip-and-ring voltage to the attached equipment of the called party. Range: 0–255 seconds. ATA device has had polarity reversal feature since release 1.0 which can be applied to both the caller and the callee end. This feature is generally used for answer supervision on the caller side to signal to the attached equipment when the call has been connected (remote end has answered) or disconnected (remote end has hung up). This feature should be disabled for the called party (in other words, by using the same polarity for connected and idle state) and the CPC feature should be used instead. Without CPC enabled, reorder tone will is played after a configurable delay. If CPC is enabled, dial tone will be played when tip-to-ring voltage is restored Resolution is 1 second. The default is **2**.

CPC Duration	Duration in seconds for which the tip-to-ring voltage is removed after the caller hangs up. After that, tip-to-ring voltage is restored and dial tone applies if the attached equipment is still off-hook. CPC is disabled if this value is set to 0. Range: 0 to 1.000 second. Resolution is 0.001 second. The default is **0** (CPC disabled).

Voice tab > Regional page >

Vertical Service Activation Codes section

Vertical Service Activation Codes are automatically appended to the dial-plan. There is no need to include them in dial-plan, although no harm is done if they are included.

Call Return Code	This code calls the last caller. The default is ***69**.
Call Redial Code	Redials the last number called. This field is not found in the PAP2T. The default is ***07**.
Blind Transfer Code	Begins a blind transfer of the current call to the extension specified after the activation code. The default is ***98**.
Call Back Act Code	Starts a callback when the last outbound call is not busy. The default is ***66**.
Call Back Deact Code	Cancels a callback. The default is ***86**.
Call Back Busy Act Code	Starts a callback when the last outbound call is busy. This field is only found in the PAP2T. The default is ***05**
Cfwd All Act Code	Forwards all calls to the extension specified after the activation code. The default is ***72**.

Cfwd All Deact Code	Cancels call forwarding of all calls. The default is ***73**.
Cfwd Busy Act Code	Forwards busy calls to the extension specified after the activation code. The default is ***90**.
Cfwd Busy Deact Code	Cancels call forwarding of busy calls. The default is ***91**.
Cfwd No Ans Act Code	Forwards no-answer calls to the extension specified after the activation code. The default is ***92**.
Cfwd No Ans Deact Code	Cancels call forwarding of no-answer calls. The default is ***93**.
Cfwd Last Act Code	Forwards the last inbound or outbound calls to the extension specified after the activation code. The default is ***63**.
Cfwd Last Deact Code	Cancels call forwarding of the last inbound or outbound calls. The default is ***83**.
Block Last Act Code	Blocks the last inbound call. The default is ***60**.
Block Last Deact Code	Cancels blocking of the last inbound call. The default is ***80**.
Accept Last Act Code	Accepts the last outbound call. It lets the call ring through when do not disturb or call forwarding of all calls are enabled. The default is ***64**.
Accept Last Deact Code	Cancels the code to accept the last outbound call. The default is ***84**.
CW Act Code	Enables call waiting on all calls. The default is ***56**.
CW Deact Code	Disables call waiting on all calls. The default is ***57**.

CW Per Call Act Code	Enables call waiting for the next call. The default is ***71**.
CW Per Call Deact Code	Disables call waiting for the next call. The default is ***70**.
Block CID Act Code	Blocks caller ID on all outbound calls. The default is ***67**.
Block CID Deact Code	Removes caller ID blocking on all outbound calls. The default is ***68**.
Block CID Per Call Act Code	Blocks caller ID on the next outbound call. The default is ***81**.
Block CID Per Call Deact Code	Removes caller ID blocking on the next inbound call. The default is ***82**.
Block ANC Act Code	Blocks all anonymous calls. The default is ***77**.
Block ANC Deact Code	Removes blocking of all anonymous calls. The default is ***87**.
DND Act Code	Enables the do not disturb feature. The default is ***78**.
DND Deact Code	Disables the do not disturb feature. The default is ***79**.
CID Act Code	Enables caller ID generation. The default is ***65**.
CID Deact Code	Disables caller ID generation. The default is ***85**.
CWCID Act Code	Enables call waiting, caller ID generation. The default is ***25**.
CWCID Deact Code	Disables call waiting, caller ID generation. The default is ***45**.

Dist Ring Act Code	Enables the distinctive ringing feature. The default is ***26**
Dist Ring Deact Code	Disables the distinctive ringing feature. The default is ***46**.
Speed Dial Act Code	Assigns a speed dial number. The default is ***74**.
Secure All Call Act Code	Makes all outbound calls secure. The default is ***16**.
Secure No Call Act Code	Makes all outbound calls not secure. The default is ***17**.
Secure One Call Act Code	Makes the next outbound call secure. (It is redundant if all outbound calls are secure by default.) The default is ***18**.
Secure One Call Deact Code	Makes the next outbound call not secure. (It is redundant if all outbound calls are not secure by default.) The default is ***19**.
Conference Act Code	If this code is specified, the user must enter it before dialing the third party for a conference call. Enter the code for a conference call.
Attn-Xfer Act Code	If the code is specified, the user must enter it before dialing the third party for a call transfer. Enter the code for a call transfer.
Modem Line Toggle Code	Toggles the line to a modem. The default is ***99**. Modem pass-through mode can be triggered only by pre-dialing this code.
FAX Line Toggle Code	Toggles the line to a fax machine. This field is not found in the PAP2T. The default is **#99**.

Referral Services Codes	These codes tell the ATA device what to do when the user places the current call on hold and is listening to the second dial tone. One or more *code can be configured into this parameter, such as *98, or *97|*98|*123, etc. Max total length is 79 chars. This parameter applies when the user places the current call on hold (by Hook Flash) and is listening to second dial tone. Each *code (and the following valid target number according to current dial plan) entered on the second dial-tone triggers the ATA device to perform a blind transfer to a target number that is prepended by the service *code. For example, after the user dials *98, the ATA device plays a special dial tone called the Prompt Tone while waiting for the user the enter a target number (which is checked according to dial plan as in normal dialing). When a complete number is entered, the ATA device sends a blind REFER to the holding party with the Refer-To target equals to *98 *target_number*. This feature allows the ATA device to hand off a call to an application server to perform further processing, such as call park. The *codes should not conflict with any of the other vertical service codes internally processed by the ATA device. You can empty the corresponding *code that you do not want to ATA device to process.

Feature Dial Services Codes	These codes tell the ATA device what to do when the user is listening to the first or second dial tone. One or more *code can be configured into this parameter, such as *72, or *72|*74|*67|*82, etc. Max total length is 79 chars. This parameter applies when the user has a dial tone (first or second dial tone). Enter *code (and the following target number according to current dial plan) entered at the dial tone triggers the ATA device to call the target number prepended by the *code. For example, after user dials *72, the ATA device plays a special tone called a Prompt tone while awaiting the user to enter a valid target number. When a complete number is entered, the ATA device sends a INVITE to *72 *target_number* as in a normal call. This feature allows the proxy to process features like call forward (*72) or BLock Caller ID (*67). The *codes should not conflict with any of the other vertical service codes internally processed by the ATA device. You can empty the corresponding *code that you do not want to ATA device to process. You can add a parameter to each *code in Features Dial Services Codes to indicate what tone to play after the *code is entered, such as *72‘c‘|*67‘p‘. Below are a list of allowed tone parameters (note the use of back quotes surrounding the parameter w/o spaces) ‘c‘ = <Cfwd Dial Tone> ‘d‘ = <Dial Tone> ‘m‘ = <MWI Dial Tone> ‘o‘ = <Outside Dial Tone> ‘p‘ = <Prompt Dial Tone> ‘s‘ = <Second Dial Tone> ‘x‘ = No tones are place, x is any digit not used above If no tone parameter is specified, the ATA device plays Prompt tone by default. If the *code is not to be followed by a phone number, such as *73 to cancel call forwarding, do not include it in this parameter. In that case, simple add that *code in the dial plan and the ATA device send INVITE *73@..... as usual when user dials *73.

Voice tab > Regional page >

Vertical Service Announcement Codes section (SPA2102, SPA8000)

Service Annc Base Number	Base number for service announcements.
Service Annc Extension Codes	Extension codes for service announcements.

Voice tab > Regional page >

Outbound Call Codec Selection Codes section

These codes automatically appended to the dial-plan. So no need to include them in dial-plan (although no harm to do so either).

Prefer G711u Code	Makes this codec the preferred codec for the associated call. The default is ***017110**.
Force G711u Code	Makes this codec the only codec that can be used for the associated call. The default is ***027110**.
Prefer G711a Code	Makes this codec the preferred codec for the associated call. The default is ***017111**
Force G711a Code	Makes this codec the only codec that can be used for the associated call. The default is ***027111**.
Prefer G723 Code	Makes this codec the preferred codec for the associated call. The default is ***01723**.

Force G723 Code	Makes this codec the only codec that can be used for the associated call. The default is ***02723**.
Prefer G726r16 Code	Makes this codec the preferred codec for the associated call. The default is ***0172616**.
Force G726r16 Code	Makes this codec the only codec that can be used for the associated call. The default is ***0272616**.
Prefer G726r24 Code	Makes this codec the preferred codec for the associated call. The default is ***0172624**.
Force G726r24 Code	Makes this codec the only codec that can be used for the associated call. The default is ***0272624**.
Prefer G726r32 Code	Makes this codec the preferred codec for the associated call. The default is ***0172632**.
Force G726r32 Code	Makes this codec the only codec that can be used for the associated call. The default is ***0272632**.
Prefer G726r40 Code	Makes this codec the preferred codec for the associated call. The default is ***0172640**.
Force G726r40 Code	Makes this codec the only codec that can be used for the associated call. The default is ***0272640**.
Prefer G729a Code	Makes this codec the preferred codec for the associated call. The default is ***01729**.
Force G729a Code	Makes this codec the only codec that can be used for the associated call. The default is ***02729**.

Voice tab > Regional page >

Miscellaneous section

Set Local Date (mm/dd)	Sets the local date (mm stands for months and dd stands for days). The year is optional and uses two or four digits.
Set Local Time (HH/mm)	Sets the local time (hh stands for hours and mm stands for minutes). Seconds are optional.
Time Zone	Selects the number of hours to add to GMT to generate the local time for caller ID generation. Choices are GMT-12:00, GMT-11:00,..., GMT, GMT+01:00, GMT+02:00, ..., GMT+13:00. The default is **GMT-08:00**.
FXS Port Impedance	Sets the electrical impedance of the FXS port. Choices are **600**, **900**, **600+2.16uF**, **900+2.16uF**, **270+750ll150nF**, **220+850ll120nF**, **220+820ll115nF**, or **200+600ll100nF**. The default is **600**. **NOTE** For New Zealand impedance (370+620ll310nF), use 270+750ll150nF.

Daylight Saving Time Rule	Enter the rule for calculating daylight saving time; it should include the start, end, and save values. This rule is comprised of three fields. Each field is separated by ; (a semicolon) as shown below. Optional values inside [ ] (the brackets) are assumed to be 0 if they are not specified. Midnight is represented by 0:0:0 of the given date. SYNTAX: Start = <start-time>; end=<end-time>; save = <save-time>. The <start-time> and <end-time> values specify the start and end dates and times of daylight saving time. Each value is in this format: <month> /<day> / <weekday>[/ HH:[mm[:ss]]] The <save-time> value is the number of hours, minutes, and/or seconds to add to the current time during daylight saving time. The <save-time> value can be preceded by a negative (-) sign if subtraction is desired instead of addition. The <save-time> value is in this format: [/[+|-]HH:[mm[:ss]]] The <month> value equals any value in the range 1-12 (January-December). The <day> value equals [+|-] any value in the range 1-31. If <day> is 1, it means the <weekday> on or before the end of the month (in other words the last occurrence of < weekday> in that month). The <weekday> value equals any value in the range 1-7 (Monday-Sunday). It can also equal 0. If the <weekday> value is 0, this means that the date to start or end daylight saving is exactly the date given. In that case, the <day> value must not be negative. If the <weekday> value is not 0 and the <day> value is positive, then daylight saving starts or ends on the <weekday> value on or after the date given. If the <weekday> value is not 0 and the <day> value is negative, then daylight saving starts or ends on the <weekday> value on or before the date given. The abbreviation HH stands for hours (0-23). The abbreviation mm stands for minutes (0-59). The abbreviation ss stands for seconds (0-59). The default Daylight Saving Time Rule is **start=4/1/7;end=10/-1/7;save=1**.

Daylight Saving Time Enable	Daylight Saving Time can be turned on or off. This option affects the time stamp on CallerID and affects all the lines and extensions of the phone. Default is **Yes** (on).
FXS Port Input Gain	Input gain in dB, up to three decimal places. The range is 6.000 to -12.000. The default is **-3**.
FXS Port Output Gain	Output gain in dB, up to three decimal places. The range is 6.000 to -12.000. The Call Progress Tones and DTMF playback level are not affected by the *FXS Port Output Gain* parameter. The default is **-3**.
DTMF Playback Level	Local DTMF playback level in dBm, up to one decimal place. The default is **-16.0**.
DTMF Playback Length	Local DTMF playback duration in milliseconds. The default is **.1**.
Detect ABCD	To enable local detection of DTMF ABCD, select yes. Otherwise, select no. The default is **yes**. Setting has no effect if DTMF Tx Method is INFO; ABCD is always sent OOB regardless in this setting.
Playback ABCD	To enable local playback of OOB DTMF ABCD, select yes. Otherwise, select no. The default is **yes**.

Caller ID Method	The following choices are available: ▪ **Bellcore (N.Amer,China)**—CID, CIDCW, and VMWI. FSK sent after first ring (same as ETSI FSK sent after first ring) (no polarity reversal or DTAS). ▪ **DTMF (Finland, Sweden)**—CID only. DTMF sent after polarity reversal (and no DTAS) and before first ring. ▪ **DTMF (Denmark)**—CID only. DTMF sentbefore first ring with no polarity reversal and no DTAS. ▪ **ETSI DTMF**—CID only. DTMF sent after DTAS (and no polarity reversal) and before first ring. ▪ **ETSI DTMF With PR**—CID only. DTMF sent after polarity reversal and DTAS and before first ring. ▪ **ETSI DTMF After Ring**—CID only. DTMF sent after first ring (no polarity reversal or DTAS). ▪ **ETSI FSK**—CID, CIDCW, and VMWI. FSK sent after DTAS (but no polarity reversal) and before first ring. Waits for ACK from CPE after DTAS for CIDCW. ▪ **ETSI FSK With PR (UK)**—CID, CIDCW, and VMWI. FSK is sent after polarity reversal and DTAS and before first ring. Waits for ACK from CPE after DTAS for CIDCW. Polarity reversal is applied only if equipment is on hook. ▪ **DTMF (Denmark) With PR**—CID only. DTMF sent after polarity reversal (and no DTAS) and before first ring. The default is **Bellcore(N.Amer, China)**.
Caller ID FSK Standard	The ATA device supports bell 202 and v.23 standards for caller ID generation. Select the FSK standard you want to use, **bell 202** or **v.23**. The default is **bell 202**. This field is not found in the PAP2T.
FXS Port Power Limit	The choices are from 1 to 8. This field is only found in the PAP2T. The default is **3**.
Feature Invocation Method	Select the method you want to use, **Default** or **Sweden default**. This field is not found in the PAP2T. The default is **Default**.

More Echo Suppression	Enable or disable more echo suppresion. The default is **no**. This field is not found in the PAP2T.

Line page

Depending on the ATA device, there may be one or more Line pages (L1, L2, and so on). You can use the *Voice tab* > *Line* page to configure the lines for voice service.

NOTE Depending on the ATA model, some of the described settings may appear on pages other than the Line page.

- On the SPA2102, refer to the Line pages and the corresponding User pages.
- On the SPA8800, refer to the Phone pages 1 to 4 to configure the settings for the Phone (FXS) ports 1 to 4. Refer to the Line pages to configure the settings for the Line (FXO) ports 1 to 4.

With some variations, depending on the model, this page includes the following sections:

- **"Line Enable section" section on page 161**
- **"Streaming Audio Server (SAS) section" section on page 162**
- **"NAT Settings section" section on page 163**
- **"Network Settings section" section on page 164**
- **"SIP Settings section" section on page 165**
- **"Call Feature Settings section" section on page 168**
- **"Proxy and Registration section" section on page 197**
- **"Subscriber Information section" section on page 171**
- **"Supplementary Service Subscription section" section on page 172**
- **"Audio Configuration section" section on page 174**
- **"VoIP Fallback to PSTN section (SPA3102 and SPA8800)" section on page 180**

- "Gateway Accounts section (SPA3102)" section on page 179
- "Dial Plan section" section on page 180
- "FXS Port Polarity Configuration section" section on page 182
- "VoIP-to-PSTN Gateway Setup section (SPA8800)," on page 183
- "PSTN-To-VoIP Gateway Setup section (SPA8800)," on page 183
- "Call Forward, Speed Dial, Supplementary Services, and Ring Settings (SPA8000 and SPA8800)," on page 189

In a configuration profile, the Line parameters must be appended with the appropriate numeral (for example, [1] or [2]) to identify the line to which the setting applies. The number of lines varies with the model of the ATA device. For example, the SPA2102 provides two Line tabs (Line 1 and Line 2), while the SPA8000 provides eight tabs (Line1 through Line 8).

Voice tab > Line page >

Line Enable section

Line Enable	To enable this line for service, select yes. Otherwise, select no. The default is **yes**.
Trunk Enable	To add this line to a trunk group, choose the trunk group number. Otherwise, choose none. This feature is available on the SPA8000 only. The default is **none**.

Voice tab > Line page >

Streaming Audio Server (SAS) section

On the SPA8800, these settings are configured on the Phone pages only.

SAS Enable	To enable the use of the line as a streaming audio source, select yes. Otherwise, select no. If enabled, the line cannot be used for outgoing calls. Instead, it auto-answers incoming calls and streams audio RTP packets to the caller. The default is **no**.
SAS DLG Refresh Intvl	If this value is not zero, it is the interval at which the streaming audio server sends out session refresh (SIP re-INVITE) messages to determine whether the connection to the caller is still active. If the caller does not respond to the refresh message, the ATA device ends this call with a SIP BYE message. The range is 0 to 255 seconds (0 means that the session refresh is disabled). The default is **30**.

SAS Inbound RTP Sink	This setting works around devices that do not play inbound RTP if the streaming audio server line declares itself as a send-only device and tells the client not to stream out audio. Enter a Fully Qualified Domain Name (FQDN) or IP address of an RTP sink; this value is used by the streaming audio server line in the SDP of its 200 response to an inbound INVITE message from a client. The purpose of this parameter is to work around devices that do not play inbound RTP if the SAS line declares itself as a send-only device and tells the client not to stream out audio. This parameter is a FQDN or IP address of a RTP sink to be used by the SPA SAS line in the SDP of its 200 response to inbound INVITE from a client. It will appear in the c = line and the port number and, if specified, in the m = line of the SDP. If this value is not specified or equal to 0, then c = 0.0.0.0 and a=sendonly will be used in the SDP to tell the SAS client to not to send any RTP to this SAS line. If a non-zero value is specified, then a=sendrecv and the SAS client will stream audio to the given address. Special case: If the value is $IP, then the SAS line's own IP address is used in the c = line and a=sendrecv. In that case the SAS client will stream RTP packets to the SAS line. The default value is empty.

Voice tab > Line page >

NAT Settings section

NAT Mapping Enable	To use externally mapped IP addresses and SIP/RTP ports in SIP messages, select yes. Otherwise, select no. The default is **no**.
NAT Keep Alive Enable	To send the configured NAT keep alive message periodically, select yes. Otherwise, select no. The default is **no**.
NAT Keep Alive Msg	Enter the keep alive message that should be sent periodically to maintain the current NAT mapping. If the value is $NOTIFY, a NOTIFY message is sent. If the value is $REGISTER, a REGISTER message without contact is sent. The default is $**NOTIFY**.

NAT Keep Alive Dest	Destination that should receive NAT keep alive messages. If the value is $PROXY, the messages are sent to the current proxy server or outbound proxy server. The default is $**PROXY**.

Voice tab > Line page >

Network Settings section

SIP ToS/DiffServ Value	TOS/DiffServ field value in UDP IP packets carrying a SIP message. The default is **0x68**.
SIP CoS Value [0-7]	CoS value for SIP messages. The default is **3**.
RTP ToS/DiffServ Value	ToS/DiffServ field value in UDP IP packets carrying RTP data. The default is **0xb8**.
RTP CoS Value [0-7]	CoS value for RTP data. The default is **6**.
Network Jitter Level	Determines how jitter buffer size is adjusted by the ATA device. Jitter buffer size is adjusted dynamically. The minimum jitter buffer size is 30 milliseconds or (10 milliseconds + current RTP frame size), whichever is larger, for all jitter level settings. However, the starting jitter buffer size value is larger for higher jitter levels. This setting controls the rate at which the jitter buffer size is adjusted to reach the minimum. Select the appropriate setting: **low**, **medium**, **high**, **very high**, or **extremely high**. The default is **high**.
Jitter Buffer Adjustment	Controls how the jitter buffer should be adjusted. Select the appropriate setting: **up and down**, **up only**, **down only**, or **disable**. The default is **up and down**.

Voice tab > Line page >

SIP Settings section

Field	Description
SIP Transport	The TCP choice provides "guaranteed delivery," which assures that lost packets are retransmitted. TCP also guarantees that the SIP packages are received in the same order that they were sent. As a result, TCP overcomes the main disadvantages of UDP. In addition, for security reasons, most corporate firewalls block UDP ports. With TCP, new ports do not need to be opened or packets dropped, because TCP is already in use for basic activities such as Internet browsing or e-commerce. Options are: **UDP**, **TCP**, **TLS**. The default is **UDP**. Applies to SPA2102, SPA3102, and SPA8800.
SIP Port	Port number of the SIP message listening and transmission port. The default is **5060**.
SIP 100REL Enable	To enable the support of 100REL SIP extension for reliable transmission of provisional responses (18x) and use of PRACK requests, select yes. Otherwise, select no. The default is **no**.
EXT SIP Port	The external SIP port number.
Auth Resync-Reboot	If this feature is enabled, the ATA device authenticates the sender when it receives the NOTIFY resync reboot (RFC 2617) message. To use this feature, select yes. Otherwise, select no. The default is **yes**.
SIP Proxy-Require	The SIP proxy can support a specific extension or behavior when it sees this header from the user agent. If this field is configured and the proxy does not support it, it responds with the message, unsupported. Enter the appropriate header in the field provided.
SIP Remote-Party-ID	To use the Remote-Party-ID header instead of the From header, select yes. Otherwise, select no. The default is **yes**.

SIP GUID	This field is not found in the PAP2T. The Global Unique ID is generated for each line for each device. When it is enabled, the ATA device adds a GUID header in the SIP request. The GUID is generated the first time the unit boots up and stays with the unit through rebooting and even factory reset. This feature was requested by Bell Canada (Nortel) to limit the registration of SIP accounts. The default is **yes**.
SIP Debug Option	SIP messages are received at or sent from the proxy listen port. This feature controls which SIP messages to log. Choices are as follows: ▪ **none**—No logging. ▪ **1-line**—Logs the start-line only for all messages. ▪ **1-line excl. OPT**—Logs the start-line only for all messages except OPTIONS requests/responses. ▪ **1-line excl. NTFY**—Logs the start-line only for all messages except NOTIFY requests/responses. ▪ 1-**line excl. REG**—Logs the start-line only for all messages except REGISTER requests/responses. ▪ **1-line excl. OPT|NTFY|REG**—Logs the start-line only for all messages except OPTIONS, NOTIFY, and REGISTER requests/responses. ▪ **full**—Logs all SIP messages in full text. ▪ **full excl. OPT**—Logs all SIP messages in full text except OPTIONS requests/responses. ▪ **full excl. NTFY**—Logs all SIP messages in full text except NOTIFY requests/responses. ▪ **full excl. REG**—Logs all SIP messages in full text except REGISTER requests/responses. ▪ **full excl. OPT|NTFY|REG**—Logs all SIP messages in full text except for OPTIONS, NOTIFY, and REGISTER requests/responses. ▪ The default is none.
RTP Log Intvl	The interval for the RTP log.

Restrict Source IP	If Lines 1 and 2 use the same SIP Port value and the Restrict Source IP feature is enabled, the proxy IP address for Lines 1 and 2 is treated as an acceptable IP address for both lines. To enable the Restrict Source IP feature, select yes. Otherwise, select no. If configured, the PAP2T will drop all packets sent to its SIP Ports originated from an untrusted IP address. A source IP address is untrusted if it does not match any of the IP addresses resolved from the configured *Proxy* (or *Outbound Proxy* if *Use Outbound Proxy* is yes). The default is **no**.
Referor Bye Delay	Controls when the ATA device sends BYE to terminate stale call legs upon completion of call transfers. Multiple delay settings (Referor, Refer Target, Referee, and Refer-To Target) are configured on this screen. For the Referor Bye Delay, enter the appropriate period of time in seconds. The default is **4**.
Refer Target Bye Delay	For the Refer Target Bye Delay, enter the appropriate period of time in seconds. The default is **0**.
Referee Bye Delay	For the Referee Bye Delay, enter the appropriate period of time in seconds. The default is **0**.
Refer-To Target Contact	To contact the refer-to target, select yes. Otherwise, select no. The default is **no**.
Sticky 183	If this feature is enabled, the IP telephony ignores further 180 SIP responses after receiving the first 183 SIP response for an outbound INVITE. To enable this feature, select yes. Otherwise, select no. The default is **no**.
Auth INVITE	When enabled, authorization is required for initial incoming INVITE requests from the SIP proxy.

Reply 182 On Call Waiting	When this feature is enabled, your ATA device replies with a SIP 182 response to the caller if it is already in a call and the phone is off-hook. To use this feature, select yes. Otherwise, keep the default, **no**. This field is found on the SPA2102, SPA3102, SPA8800 only.
Use Anonymous with RPID	When set to yes, use “anonymous” in the SIP message when remote party ID is requested in the SIP message. This field is found on the SPA2102 only. Default is **yes**.
Use Local Addr in FROM	The IP address of the local address enclosed in the FROM of the SIP message. This field is found on the SPA2102 only. Default is **no**.

Voice tab > Line page >

Call Feature Settings section

On the SPA8800, these settings are configured on the Phone pages only.

Blind Attn-Xfer Enable	Enables the ATA device to perform an attended transfer operation by ending the current call leg and performing a blind transfer of the other call leg. If this feature is disabled, the ATA device performs an attended transfer operation by referring the other call leg to the current call leg while maintaining both call legs. To use this feature, select yes. Otherwise, select no. The default is **no**.
MOH Server	User ID or URL of the auto-answering streaming audio server. When only a user ID is specified, the current or outbound proxy is contacted. Music-on-hold is disabled if the MOH Server is not specified.
Conference Bridge URL	This feature supports external conference bridging for n-way conference calls (n > 2), instead of mixing audio locally. To use this feature, set this parameter to that of the server’s name, for example, conf@myserver.com:12345 or conf (which uses the Proxy value as the domain). This field is found on the SPA2102 and PAP2T only.

Conference Bridge Ports	Select the maximum number of conference call participants. The range is 3 to 10. The default is **3**. This field is found on the SPA2102 and PAP2T only.

Voice tab > Line page or Phone page>

Proxy and Registration section

Proxy	SIP proxy server for all outbound requests.
Outbound Proxy	SIP Outbound Proxy Server where all outbound requests are sent as the first hop.
Use Outbound Proxy	Enablse the use of an *Outbound Proxy.* If set to no, the *Outbound Proxy* and *Use OB Proxy in Dialog* parameters are ignored. The default is **no**.
Use OB Proxy In Dialog	Whether to force SIP requests to be sent to the outbound proxy within a dialog. Ignored if the parameter *Use Outbound Proxy* is no, or the *Outbound Proxy* parameter is empty. The default is **yes**.
Register	Enable periodic registration with the *Proxy* parameter. This parameter is ignored if *Proxy* is not specified. The default is **yes**.
Make Call Without Reg	Allow making outbound calls without successful (dynamic) registration by the unit. If No, dial tone will not play unless registration is successful. The default is **no**.
Register Expires	Allow answering inbound calls without successful (dynamic) registration by the unit. If proxy responded to REGISTER with a smaller Expires value, the PAP2T will renew registration based on this smaller value instead of the configured value. If registration failed with an Expires too brief error response, the PAP2T will retry with the value given in the Min-Expires header in the error response. The default is **3600**.

Ans Call Without Reg	Expires value in sec in a REGISTER request. The PAP2T will periodically renew registration shortly before the current registration expired. This parameter is ignored if the *Register* parameter is no. Range: 0 – (231 – 1) sec
Use DNS SRV	Whether to use DNS SRV lookup for Proxy and Outbound Proxy. The default is **no**.
DNS SRV Auto Prefix	If enabled, the PAP2T will automatically prepend the Proxy or Outbound Proxy name with _sip._udp when performing a DNS SRV lookup on that name. The default is **no**.
Proxy Fallback Intvl	This parameter sets the delay (sec) after which the PAP2T will retry from the highest priority proxy (or outbound proxy) servers after it has failed over to a lower priority server. This parameter is useful only if the primary and backup proxy server list is provided to the PAP2T via DNS SRV record lookup on the server name. (Using multiple DNS A record per server name does not allow the notion of priority and so all hosts will be considered at the same priority and the PAP2T will not attempt to fall back after a fail over). The default is **3600**
Proxy Redundancy Method	PAP2T will make an internal list of proxies returned in DNS SRV records. In normal mode, this list will contain proxies ranked by weight and priority. if Based on SRV port is configured the PAP2T does normal first, and also inspect the port number based on 1st proxy's port on the list. The default is **Normal**.
Voice Mail Server	Enter the URL or IP address of the server.
Mailbox Subscribe Expires	Expiry time to the voice mail server. The time to send another subscribe message to the voice mail server.

Voice tab > Line page >

Subscriber Information section

Display Name	Display name for caller ID.
User ID	Extension number to identify this line.
Password	Password for this line.
Use Auth ID	To use the authentication ID and password for SIP authentication, select yes. Otherwise, select no to use the user ID and password. The default is **no**.
Auth ID	Authentication ID for SIP authentication.
Directory Number	Enter the number for this line.
Call Capacity	Maximum number of calls allowed on this line interface. Choices: {unlimited,1,2,3,...25 }. Default is **16**. Note that the the ATA device does not distinguish between incoming and outgoing calls when talking about call capacity. **NOTE:** unlimited = 16
Cfwd No Ans Delay	Delay, in seconds, before the call forwarding of no-answer calls feature is triggered. The default is **20**.
Mini Certificate	Base64 encoded of Mini-Certificate concatenated with the 1024-bit public key of the CA signing the MC of all subscribers in the group. The default is empty.
SRTP Private Key	Base64 encoded of the 512-bit private key per subscriber for establishment of a secure call. The default is empty.

Voice tab > Line page >

Supplementary Service Subscription section

The ATA device provides native support of a large set of enhanced or supplementary services. All of these services are optional. The parameters listed in the following table are used to enable or disable a specific supplementary service. A supplementary service should be disabled if a) the user has not subscribed for it, or b) the Service Provider intends to support similar service using other means than relying on the ATA device.

On the SPA8800, these settings are configured on the Phone pages only.

Call Waiting Serv	Enable Call Waiting Service. The default is **yes**.
Block CID Serv	Enable Block Caller ID Service. The default is **yes**.
Block ANC Serv	Enable Block Anonymous Calls Service The default is **yes**.
Dist Ring Serv	Enable Distinctive Ringing Service The default is **yes**.
Cfwd All Serv	Enable Call Forward All Service The default is **yes**.
Cfwd Busy Serv	Enable Call Forward Busy Service The default is **yes**.
Cfwd No Ans Serv	Enable Call Forward No Answer Service The default is **yes**.
Cfwd Sel Serv	Enable Call Forward Selective Service The default is **yes**.
Cfwd Last Serv	Enable Forward Last Call Service The default is **yes**.
Block Last Serv	Enable Block Last Call Service The default is **yes**.

Accept Last Serv	Enable Accept Last Call Service The default is **yes**.
DND Serv	Enable Do Not Disturb Service The default is **yes**.
CID_Serv	Enable Caller ID Service The default is **yes**.
CWCID Serv	Enable Call Waiting Caller ID Service The default is **yes**.
Call Return Serv	Enable Call Return Service The default is **yes**.
Call Redial Serv	Enable Call Redial Service. This field is not found in the PAP2T.
Call Back Serv	Enable Call Back Service.
Three Way Call Serv	Enable Three Way Calling Service. Three Way Calling is required for Three Way Conference and Attended Transfer. The default is **yes**.
Three Way Conf Serv	Enable Three Way Conference Service. Three Way Conference is required for Attended Transfer. The default is **yes**.
Attn Transfer Serv	Enable Attended Call Transfer Service. Three Way Conference is required for Attended Transfer. The default is **yes**.
Unattn Transfer Serv	Enable Unattended (Blind) Call Transfer Service. The default is **yes**.
MWI Serv	Enable MWI Service. MWI is available only if a Voice Mail Service is set-up in the deployment. The default is **yes**.
VMWI Serv	Enable VMWI Service (FSK). The default is **yes**.
Speed Dial Serv	Enable Speed Dial Service. The default is **yes**.

Secure Call Serv	Enable Secure Call Service. The default is **yes**.
Referral Serv	Enable Referral Service. See the *Referral Services Codes* parameter for more details. The default is **yes**.
Feature Dial Serv	Enable Feature Dial Service. See the *Feature Dial Services Codes* parameter for more details. The default is **yes**.
Service Announcement Serv	Enable Service Announcement Service. The default is **yes**.

Voice tab > Line page >

Audio Configuration section

A codec resource is considered as allocated if it has been included in the SDP codec list of an active call, even though it eventually may not be the one chosen for the connection. So, if the G.729a codec is enabled and included in the codec list, that resource is tied up until the end of the call whether or not the call actually uses G.729a. If the G.729a resource is already allocated and since only one G.729a resource is allowed per device, no other low-bit-rate codec may be allocated for subsequent calls; the only choices are G711a and G711u. On the other hand, two G.723.1/G.726 resources are available per device.

Therefore it is important to disable the use of G.729a in order to guarantee the support of two simultaneous G.723/G.726 codec.

Field	Description
Preferred Codec	Preferred codec for all calls. (The actual codec used in a call still depends on the outcome of the codec negotiation protocol.) Select one of the following: **G711u, G711a, G726-16, G726-24, G726-32, G726-40, G729a,** or **G723.** The default is **G711u**.

Second Preferred Codec	Second preferred codec for all calls. (The actual codec used in a call still depends on the outcome of the codec negotiation protocol.) Select one of the following: **Unspecified**, **G711u, G711a, G726-16, G726-24, G726-32, G726-40, G729a,** or **G723.** The default is **Unspecified**.
Third Preferred Codec	Third preferred codec for all calls. (The actual codec used in a call still depends on the outcome of the codec negotiation protocol.) Select one of the following: **Unspecified, G711u, G711a, G726-16, G726-24, G726-32, G726-40, G729a,** or **G723.** The default is **Unspecified**.
Use Pref Codec Only	To use only the preferred codec for all calls, select yes. (The call fails if the far end does not support this codec.) Otherwise, select no. The default is **no**.
Silence Supp Enable	To enable silence suppression so that silent audio frames are not transmitted, select yes. Otherwise, select no. The default is **no**.
Silence Threshold	Select the appropriate setting for the threshold: high, medium, or low. The default is **medium**.
G729a Enable	To enable the use of the G.729a codec at 8 kbps, select yes. Otherwise, select no. The default is **yes**.
Echo Canc Enable	To enable the use of the echo canceller, select yes. Otherwise, select no. The default is **yes**.
G723 Enable	To enable the use of the G.723a codec at 6.3 kbps, select yes. Otherwise, select no. The default is **yes**.

Echo Canc Adapt Enable	To enable the echo canceller to adapt, select yes. Otherwise, select no. The default is **yes**.
G726-16 Enable	To enable the use of the G.726 codec at 16 kbps, select yes. Otherwise, select no. The default is **yes**.
Echo Supp Enable	To enable the use of the echo suppressor, select yes. Otherwise, select no. The default is **yes**.
G726-24 Enable	To enable the use of the G.726 codec at 24 kbps, select yes. Otherwise, select no. The default is **yes**.
FAX CED Detect Enable	To enable detection of the fax Caller-Entered Digits (CED) tone, select yes. Otherwise, select no. The default is **yes**.
G726-32 Enable	To enable the use of the G.726 codec at 32 kbps, select yes. Otherwise, select no. The default is **yes**.
FAX CNG Detect Enable	To enable detection of the fax Calling Tone (CNG), select yes. Otherwise, select no. The default is **yes**.
G726-40 Enable	To enable the use of the G.726 codec at 40 kbps, select yes. Otherwise, select no. The default is **yes**.
FAX Passthru Codec	Select the codec for fax passthrough, G711u or G711a. The default is **G711u**.
DTMF Process INFO	To use the DTMF process info feature, select yes. Otherwise, select no. The default is **yes**.

FAX Codec Symmetric	To force the ATA to use a symmetric codec during fax passthrough, select yes. Otherwise, select no. The default is **yes**.
DTMF Process AVT	To use the DTMF process AVT feature, select yes. Otherwise, select no. This field is not available for the PAP2T. The default is **yes**.
FAX Passthru Method	Select the fax passthrough method: None, NSE, or RelNVITE. The default is **NSE**.
DTMF Tx Method	Select the method to transmit DTMF signals to the far end: **InBand, AVT, INFO, Auto, InBand+INFO**, or **AVT+INFO.** InBand sends DTMF using the audio path. AVT sends DTMF as eypents. INFO uses the SIP INFO method. Auto uses InBand or AVT based on the outcome of codec negotiation. The default is **Auto**.

DTMF Tx Mode	DTMF Detection Tx Mode is available for SIP information and AVT . Options are: **Strict** or **Normal**. The default is **Strict** for which the following are true:
	
	▪ A DTMF digit requires an extra hold time after detection.
	▪ The DTMF level threshold is raised to -20 dBm.
	▪ The minimum and maximum duration thresholds are:
	  ▪ strict mode for AVT: 70 ms
	  ▪ normal mode for AVT: 40 ms
	  ▪ strict mode for SIP info: 90 ms
	  ▪ normal mode for SIP info: 50 ms

DTMF Tx Strict Hold Off Time:	This parameter is in effect only when "DTMF Tx Mode" is set to "strict," and when"DTMF Tx Method" is set to out-of-band; i.e. either AVT or SIP-INFO. The value can be set as low as 40 ms. There is no maximum limit. A larger value will reduce the chance of talk-off (beeping) during conversation, at the expense of reduced performance of DTMF detection, which is needed for interactive voice response systems (IVR). Default: **90 ms**

FAX Process NSE	To use the fax process NSE feature, select yes. Otherwise, select no. The default is **yes**.
Hook Flash Tx Method	Select the method for signaling hook flash events: None, AVT, or INFO. None does not signal hook flash events. AVT uses RFC2833 AVT (event = 16). INFO uses SIP INFO with the single line signal=hf in the message body. The MIME type for this message body is taken from the Hook Flash MIME Type setting. The default is **None**.
FAX Disable ECAN	If enabled, this feature automatically disables the echo canceller when a fax tone is detected. To use this feature, select yes. Otherwise, select no. The default is **no**.
Release Unused Codec	This feature allows the release of codecs not used after codec negotiation on the first call, so that other codecs can be used for the second line. To use this feature, select yes. Otherwise, select no. The default is **yes**.
FAX Enable T38	To enable the use of the ITU-T T.38 standard for faxing, select **yes**. Otherwise, select **no**. T.38 is supported by the SPA2102 and the SPA8000. The SPA2102 supports a single T.38 connection. The SPA8000 supports one T.38 connection for each of its four modules (Line 1-2, 3-4, 5-6, and 7-8). The SPA8000 supports a maximum of four connections, but it does not support two fax devices connected to the same module. The default is **yes**.
FAX T38 Redundancy	Select the appropriate number. The default is **1**.

Fax Tone Detect Mode	If you want the Gateway to detect the fax tone whether the Gateway is a caller or callee, then select caller or callee. If you want the Gateway to detect the fax tone only if the Gateway is the caller, then select caller only. If you want the Gateway to detect the fax tone only if the Gateway is the callee, then select callee only.
FAX Tone Detect Mode	This parameter has three possible values: ▪ caller or callee - SPA will detect FAX tone whether it is callee or caller ▪ caller only - SPA will detect FAX tone only if it is the caller ▪ callee only - SPA will detect FAX tone only if it is the callee The default is **caller or callee**.
Symmetric RTP	(SPA3102) Enable symmetric RTP operation. If enabled, the SPA3102 sends RTP packets to the source address and port of the last received valid inbound RTP packet. If disabled (or before the first RTP packet arrives), the SPA3102 sends RTP to the destination as indicated in the inbound SDP. The default is **yes**.

Gateway Accounts section (SPA3102)

Gateway1/2/3/4	The first of 4 gateways that can be specified to be used in the <Dial Plan> to facilitate call routing specification (that overrides the given proxy information). This gateway is represented by gw1 in the <Dial Plan>. For example, the rule 1408xxxxxxx<:@gw1> can be added to the dial plan such that when the user dials 1408+7digits, the call will be routed to Gateway 1. Without the <:@gw1> syntax, all calls are routed to the given proxy by default (except IP dialing). The default is blank.

GW1/2/3/4 NAT Mapping Enable	If enabled, the ATA device uses NAT mapping when contacting Gateway 1. The default is **no**.
GW1/2/3/4 Auth ID	This value is the authentication user-id to be used by the SPA to authenticate itself to Gateway 1. The default is blank.
GW1/2/3/4 Password	This value is the password to be used by the SPA to authenticate itself to Gateway 1. The default is blank.

Voice tab > Line page >

VoIP Fallback to PSTN section (SPA3102 and SPA8800)

On the SPA8800, these settings are configured on the Phone pages only.

Auto PSTN Fallback	If enabled, the ATA device automatically routes all calls to the PSTN gateway when the Line 1 proxy is down (registration failure or network link down). The default is **yes**.

Voice tab > Line page >

Dial Plan section

The dial plan determines how the entered digits are processed.

On the SPA8800, the Line page includes the dial plan fields as described below. However, on the Phone page, the Dial Plans section provides eight spaces where you can enter up to eight dial plans. The dial plans in this pool can be associated with a VoIP Caller or a PSTN Caller. The dial plan syntax is consistent for all fields.

The default dial plan script for each line is as follows: (*xx|[3469]11|0|00|[2-9]xxxxxx|1xxx[2-9]xxxxxx|xxxxxxxxxxxx.). The syntax for a dial plan expression is as follows:

Dial Plan Entry	Functionality
*xx	Allow arbitrary 2 digit star code
[3469]11	Allow x11 sequences
0	Operator
00	Int'l Operator
[2-9]xxxxxx	US local number
1xxx[2-9]xxxxxx	US 1 + 10-digit long distance number
xxxxxxxxxxxx.	Everything else (Int'l long distance, FWD, ...)

Dial Plan	Dial plan script for this line.
	
	The default is **(*xx|[3469]11|0|00|[2-9]xxxxxx|1xxx[2-9]xxxxxxS0|xxxxxxxxxxxx.)**
	
	The dial plan syntax is expanded in the SPA3102 to allow the designation of three parameters to be used with a specific gateway:
	
	▪ uid – the authentication user-id
	▪ pwd – the authentication password
	▪ nat – if this parameter is present, use NAT mapping
	
	Each parameter is separated by a semi-colon (;).
	
	Furthermore, it recognizes gw0, gw1, ..., gw4 as the locally configured gateways, where gw0 represents the local PSTN gateway in the same SPA3102.
	
	Example 1:
	
	`*1xxxxxxxxxx<:@fwdnat.pulver.com:5082;uid=jsmith;pwd=xyz`
	
	Example 2:
	
	`*1xxxxxxxxxx<:@fwd.pulver.com;nat;uid=jsmith;pwd=xyz`
	
	Example 3:
	
	`[39]11<:@gw0>`

Enable IP Dialing	Enable or disable IP dialing. If IP dialing is enabled, one can dial [user-id@]a.b.c.d[:port], where '@', '.', and ':' are dialed by entering *, user-id must be numeric (like a phone number) and a, b, c, d must be between 0 and 255, and port must be larger than 255. If port is not given, 5060 is used. Port and User-Id are optional. If the user-id portion matches a pattern in the dial plan, then it is interpreted as a regular phone number according to the dial plan. The INVITE message, however, is still sent to the outbound proxy if it is enabled. The default is **no**.
Emergency Number	Comma separated list of emergency number patterns. If outbound call matches one of the pattern, SPA will disable hook flash event handling. The condition is restored to normal after the phone is on-hook. Blank signifies no emergency number. Maximum number length is 63 characters. The default is blank.

Voice tab > Line page or Phone page>

FXS Port Polarity Configuration section

On the SPA8800, these settings are configured on the Phone pages only.

Idle Polarity	Polarity before a call is connected: Forward or Reverse. The default is **Forward**.
Caller Conn Polarity	Polarity after an outbound call is connected: Forward or Reverse. The default is **Forward**.
Callee Conn Polarity	Polarity after an inbound call is connected: Forward or Reverse. The default is **Forward**.

Voice tab > Line page or Phone page>

VoIP-to-PSTN Gateway Setup section (SPA8800)

Line 1 VoIP Caller DP	Index of the dial plan in the dial plan pool to be used when the VoIP Caller is calling from Line 1 of the same SPA8800 unit during normal operation (in other words, not due to fallback to PSTN service when Line 1 VoIP service is down). Choose from {none, 1, 2, 3, 4, 5, 6, 7, 8} Authentication is skipped for Line 1 VoIP caller. The default is **1**.
VoIP Caller Default DP	Index of the dial plan in the dial plan pool to be used as the default. Choose from {none, 1, 2, 3, 4, 5, 6, 7, 8}. The default is **1**.
Line 1 Fallback DP	Index of the dial plan in the dial plan pool to be used when the VoIP Caller is calling from Line 1 of the same SPA8800 unit due to fallback to PSTN service when Line 1 VoIP service is down. Choose from {none, 1, 2, 3, 4, 5, 6, 7, 8}. The default is **1**.

Voice tab > Line page >

PSTN-To-VoIP Gateway Setup section (SPA8800)

PSTN CID for VoIP CID	Choose yes or no. The default is **no**.
PSTN CID Number Prefix	The prefix to add to the caller ID number on the PBX to ensure that a callback goes to the correct number. Enter the digits.
PSTN caller Default DP	Index of the dial plan in the dial plan pool to be used when the PSTN Caller is not authenticated. Choose from {1, 2, 3, 4, 5, 6, 7, 8}. The default is **1**.

Line 1 Signal Hook Flash to PSTN	The operation of the hook flash on the analog phone when a PSTN-to-VoIP call is active. Choose Disabled or Double Hook Flash. The default is **Disabled**.
PSTN CID Name Prefix	The prefix to add to the caller ID name that is sent to the PBX. Enter the characters to add to the caller ID name.

Voice tab > Line page >

FXO Timer Values (sec) section (SPA8800)

PSTN Answer Delay	Delay in seconds before auto-answering inbound PSTN calls after the PSTN starts ringing. The range is 0-255. The default is **16**.
PSTN-To-VoIP Call Max Dur	Limit on the duration of a PSTN-To-VoIP Gateway Call. Unit is in seconds. 0 means unlimited. The range is 0-2147483647. The default is **0**.
VoIP-To-PSTN Call Max Dur	Limit on the duration of a VoIP-To-PSTN Gateway Call. Unit is in seconds. 0 means unlimited. The range is 0-2147483647. The default is **0**.
VoIP DLG Refresh Intvl	Interval between (SIP) Dialog refresh messages sent by the SPA to detect if the VoIP call-leg is still up. If value is set to 0, SPA will not send refresh messages and VoIP call-leg status is not checked by the SPA. The refresh message is a SIP ReINVITE and the VoIP peer must response with a 2xx response. If VoIP peer does not reply or response is not greater than 2xx, the SPA will disconnect both PSTN and VoIP call legs automatically. The range is 0-255. The default is **30**.
PSTN Ring Timeout	Delay after a ring burst before the SPA decides that PSTN ring has ceased. The range is 0-255. The default is **5**.

PSTN Dialing Delay	Delay after hook before the SPA dials a PSTN number. The range is 0-255. The default is **1**.
PSTN Dial Digit Len	Determines the on/off time when transmitting digits through the FXO port. The syntax is *on-time/off-time*, where *on-time* and *off-time* are expressed in seconds with up to two decimal places, within the permitted range, which is from .05 to 3.00. The default is **.1/.1**. If this value is blank, the default is used.
PSTN Hook Flash Len	The length of the hook flash in seconds. During a PSTN-to-VoIP gateway call, the ATA device processes the out-of-band hook flash signal sent from the VoIP peer through a hook-flash (momentary on-hook signal) on the FXO port. This allows the VoIP peer to initiate a three-way conference call and subsequent call transfer. The duration of the on-hook signal can be configured using this parameter. The default is **0.25**. The permitted range is limited to 0.02 to 1.6 seconds.
PSTN Dial Digit Len	Specify the on/off time when the Gateway transmits digits through the Line (FXO) port. The syntax is on-time/off-time, expressed in seconds with up to two decimal places. The permitted range is 0.05 to 3.00. The default is **.1/.1**.
PSTN Hook Flash Len	Default is **.25**.

Voice tab > Line page >

PSTN Disconnect Detection section (SPA8800)

On the SPA8800, these settings are configured on the Phone pages only.

Detect CPC	CPC is a brief removal of tip-and-ring voltage. If enabled, the SPA will disconnect both call legs when this signal is detected during a gateway call. The default is **yes**.

Detect Polarity Reversal	If enabled, SPA will disconnect both call legs when this signal is detected during a gateway call. If it is a PSTN gateway call, the 1st polarity reversal is ignored and the 2nd one triggers the disconnection. For VoIP gateway call, the 1st polarity reversal triggers the disconnection. The default is **yes**.
Detect PSTN Long Silence	If enabled, SPA will disconnect both call legs when the PSTN side has no voice activity for a duration longer than the length specified in the PSTN Long Silence Duration parameter during a gateway call. The default is **yes**.
Detect VoIP Long Silence	If enabled, SPA will disconnect both call legs when the VoIP side has no voice activity for a duration longer than the length specified in the VoIP Long Silence Duration parameter during a gateway call. The default is **no**.
PSTN Long Silence Duration	This value is minimum length of PSTN silence (or inactivity) in seconds to trigger a gateway call disconnection if Detect PSTN Long Silence is yes. The default is **30**.
VoIP Long Silence Duration	This value is minimum length of VoIP silence (or inactivity) in seconds to trigger a gateway call disconnection if Detect VoIP Long Silence is yes. The default is **30**.
PSTN Silence Threshold	This parameter adjusts the sensitivity of PSTN silence detection. Choose from {very low, low, medium, high, very high}. The higher the setting, the easier to detect silence and hence easier to trigger a disconnection. The default is **medium**.
Min CPC Duration	Specify the minimum duration of a low tip-and-ring voltage (below 1V) for the Gateway to recognize it as a CPC signal or PSTN line removal. The default is **0.2**.
Detect Disconnect Tone	If enabled, SPA will disconnect both call legs when it detects the disconnect tone from the PSTN side during a gateway call. Disconnect tone is specified in the *Disconnect Tone* parameter, which depends on the region of the PSTN service. The default is **yes**.

Disconnect Tone	This value is the tone script which describes to the SPA the tone to detect as a disconnect tone. The syntax follows a standard Tone Script with some restrictions. Default value is standard US reorder (fast busy) tone, for 4 seconds. Restrictions: ▪ 2 frequency components must be given. If single frequency is desired, the same frequency is used for both ▪ The tone level value is not used. –30 (dBm) should be used for now. ▪ Only 1 segment set is allowed ▪ Total duration of the segment set is interpreted as the minimum duration of the tone to trigger detection ▪ 6 segments of on/off time (seconds) can be specified. A 10% margin is used to validated cadence characteristics of the tone.
Disconnect Tone continued	The Disconnect Tone Script values for various countries follow: **US**—480@-30,620@-30;4(.25/.25/1+2) **UK**—400@-30,400@-30; 2(3/0/1+2) **France**—440@-30,440@-30; 2(0.5/0.5/1+2) **Germany**—425@-10; 10(0.48/0.48/1) **Netherlands**—425@-30,425@-30; 2(0.5/0.5/1+2) **Sweden**—425@-10; 10(0.25/0.25/1) **Norway**—425@-10; 10(0.5/0.5/1) **Italy**—425@-30,425@-30; 2(0.2/0.2/1+2) **Spain**—425@-10; 10(0.2/0.2/1,0.2/0.2/1,0.2/0.6/1) **Portugal**—425@-10; 10(0.5/0.5/1) **Poland**—425@-10; 10(0.5/0.5/1) **Denmark**—425@-10; 10(0.25/0.25/1) **New Zealand**—400@-15; 10(0.25/0.25/1) **Australia**—425@-13; 10(0.375/0.375/1)

Voice tab > Line page >

International Control section (SPA8800)

FXO Port Impedance	Desired impedance of the FXO Port. Choose from {**600**, **900, 370+620, 270+750‖150nF, 220+820‖120nF**, **370 + 620 ‖ 310nf**, **320 + 1050 ‖ 230nf**, **370 + 820 ‖ 110 nf**, **275 + 780 ‖ 115nf**, **120 + 820 ‖ 110nf**, **350 + 1000 ‖ 210nf**, **0 + 900 ‖ 130nf**} The default is **600**. The impedance values for various countries follows: **US**—600 **EU (UK, Germany, Netherlands, Sweden, Norway, Italy, Spain, Portugal, Poland, and Denmark)**—270+750‖150nF **France**—270+750‖150nF **Australia**—220+820‖120nF **New Zealand**—370+620‖310nF
Ring Frequency Min	The lower limit of the ring frequency used to detect the ring signal. The default is **10**.
SPA To PSTN Gain	dB of digital gain (or attenuation if negative) to be applied to the signal sent from the SPA to the PSTN side. The range is -15 to 12. The default is **0**.
Ring Frequency Max	The higher limit of the ring frequency used to detect the ring signal. The default is **90**.
PSTN To SPA Gain	dB of digital gain (or attenuation if negative) to be applied to the signal sent from the PSTN side to the SPA. The range is -15 to 12. The default is **0**.
Ring Validation Time	Specify the minimum signal duration required by the Gateway for recognition as a ring signal. The default is **256 ms**.

Tip/Ring Voltage Adjust	Choices are {3.1, 3.2, 3.35, 3.5} (V). The default is **3.5 V**.
Ring Indication Delay	Choose from {0, 256, 512, 768, 1024, 1280, 1536, 1792} (ms). The default is **512ms**.
Operational Loop Current Min	Choices for mA are: {10, 12, 14, 16). The default is **10 mA**.
Ring Timeout	Choose from {0, 128, 256, 384, 512, 640, 768, 896, 1024, 1152, 1280, 1408, 1536, 1664, 1792, 1920} (ms). The default is **640 ms**.
On-Hook Speed	Choose from {Less than 0.5ms, 3ms (ETSI), 26ms (Australia)}. The default is **Less than 0.5ms**.
Ring Threshold	Choose from {13.5–16.5, 19.35–2.65, 40.5–49.5} (Vrms). The default is **13.5-16.5 Vrms**.
Current Limiting Enable	Enable or disable current limiting. The default is **no**.
Ringer Impedance	Choose from {High (Normal), Synthesized (Poland, S.Africa, Slovenia)}. The default is **High (Normal)**.
Line-In-Use Voltage	Determines the voltage threshold at which the SPA-3000 assumes the PSTN is in use by another handset sharing the same line (and will declare PSTN gateway service not available to incoming VoIP callers). The default value is **30**.

Call Forward, Speed Dial, Supplementary Services, and Ring Settings (SPA8000 and SPA8800)

On the SPA8000 and the SPA8800, you can configure settings for call forward, speed dial, and supplementary services, as well as ring settings. For field descriptions, see **"User page," on page 220**.

Trunk Group page (SPA8000)

On the SPA8000, you can use the *Voice tab > Trunk Group* pages (*T1 … T4)* to configure the Trunk Groups. This page includes the following sections:

- **"Line Enable section" section on page 190**
- **"NAT Settings section" section on page 196**
- **"Network Settings section" section on page 190**
- **"SIP Settings section" section on page 191**
- **"Subscriber Information section" section on page 194**
- **"Dial Plan section" section on page 196**
- **"Proxy and Registration section" section on page 204**

Voice tab > Trunk Group page (SPA8000)>

Line Enable section

Line Enable	To enable this line for service, select yes. Otherwise, select no. The default is **yes**.

Voice tab > Trunk Group page (SPA8000)>

Network Settings section

SIP ToS/DiffServ Value	TOS/DiffServ field value in UDP IP packets carrying a SIP message. The default is **0x68**.
SIP CoS Value [0-7]	CoS value for SIP messages. The default is **3**.

Voice tab > Trunk Group page (SPA8000)>

SIP Settings section

SIP Transport	The TCP choice provides “guaranteed delivery”, which assures that lost packets are retransmitted. TCP also guarantees that the SIP packages are received in the same order that they were sent. As a result, TCP overcomes the main disadvantages of UDP. In addition, for security reasons, most corporate firewalls block UDP ports. With TCP, new ports do not need to be opened or packets dropped, because TCP is already in use for basic activities such as Internet browsing or e-commerce. Options are: **UDP**, **TCP**, **TLS**. The default is **UDP**.
SIP Port	Port number of the SIP message listening and transmission port. The default is **5060**.
SIP 100REL Enable	To enable the support of 100REL SIP extension for reliable transmission of provisional responses (18x) and use of PRACK requests, select yes. Otherwise, select no. The default is **no**.
Auth Resync-Reboot	If this feature is enabled, the ATA device authenticates the sender when it receives the NOTIFY resync reboot (RFC 2617) message. To use this feature, select yes. Otherwise, select no. The default is **yes**.
SIP Proxy-Require	The SIP proxy can support a specific extension or behavior when it sees this header from the user agent. If this field is configured and the proxy does not support it, it responds with the message, unsupported. Enter the appropriate header in the field provided.
SIP Remote-Party-ID	To use the Remote-Party-ID header instead of the From header, select yes. Otherwise, select no. The default is **yes**.

SIP GUID	This field is not found in the PAP2T. The Global Unique ID is generated for each line for each device. When it is enabled, the ATA device adds a GUID header in the SIP request. The GUID is generated the first time the unit boots up and stays with the unit through rebooting and even factory reset. This feature was requested by Bell Canada (Nortel) to limit the registration of SIP accounts. The default is **yes**.
SIP Debug Option	SIP messages are received at or sent from the proxy listen port. This feature controls which SIP messages to log. Choices are as follows: ▪ **none**—No logging. ▪ **1-line**—Logs the start-line only for all messages. ▪ **1-line excl. OPT**—Logs the start-line only for all messages except OPTIONS requests/responses. ▪ **1-line excl. NTFY**—Logs the start-line only for all messages except NOTIFY requests/responses. ▪ 1-**line excl. REG**—Logs the start-line only for all messages except REGISTER requests/responses. ▪ **1-line excl. OPT|NTFY|REG**—Logs the start-line only for all messages except OPTIONS, NOTIFY, and REGISTER requests/responses. ▪ **full**—Logs all SIP messages in full text. ▪ **full excl. OPT**—Logs all SIP messages in full text except OPTIONS requests/responses. ▪ **full excl. NTFY**—Logs all SIP messages in full text except NOTIFY requests/responses. ▪ **full excl. REG**—Logs all SIP messages in full text except REGISTER requests/responses. ▪ **full excl. OPT|NTFY|REG**—Logs all SIP messages in full text except for OPTIONS, NOTIFY, and REGISTER requests/responses. The default is none.

Restrict Source IP	If Lines 1 and 2 use the same SIP Port value and the Restrict Source IP feature is enabled, the proxy IP address for Lines 1 and 2 is treated as an acceptable IP address for both lines. To enable the Restrict Source IP feature, select yes. Otherwise, select no. If configured, the PAP2T will drop all packets sent to its SIP Ports originated from an untrusted IP address. A source IP address is untrusted if it does not match any of the IP addresses resolved from the configured *Proxy* (or *Outbound Proxy* if *Use Outbound Proxy* is yes). The default is **no**.
Referor Bye Delay	Controls when the ATA device sends BYE to terminate stale call legs upon completion of call transfers. Multiple delay settings (Referor, Refer Target, Referee, and Refer-To Target) are configured on this screen. For the Referor Bye Delay, enter the appropriate period of time in seconds. The default is **4**.
Refer Target Bye Delay	For the Refer Target Bye Delay, enter the appropriate period of time in seconds. The default is **0**.
Referee Bye Delay	For the Referee Bye Delay, enter the appropriate period of time in seconds. The default is **0**.
Refer-To Target Contact	To contact the refer-to target, select yes. Otherwise, select no. The default is **no**.
Auth INVITE	When enabled, authorization is required for initial incoming INVITE requests from the SIP proxy.

Voice tab > Trunk Group page > (SPA8000) >

Subscriber Information section

Display Name	Display name for caller ID.
User ID	Extension number for this line.
Password	Password for this line.
Use Auth ID	To use the authentication ID and password for SIP authentication, select yes. Otherwise, select no to use the user ID and password. The default is **no**.
Auth ID	Authentication ID for SIP authentication.
Call Capacity	Maximum number of calls allowed on this trunk group. Choices: 1-15 or unlimited (16 calls). Default is **unlimited**. Both incoming call and outgoing call are counted towards this limit. The call capacity has the following impact on call handling: ▪ Inbound calls: When the limit is reached, the Trunk SUA replies 486 to the caller. ▪ Outbound calls: When the limit is reached, the Line SUA plays a fast busy tone to the caller. Note that a trunk line can make an outgoing call only through its own trunk. If that trunk reaches full capacity, it will not attempt to failover to use other trunks

Contact List	This parameter determines which trunk lines to ring on an incoming call. When an incoming call is detected by the Trunk SUA (SIP User Agent), the SUA first checks if there is capacity to handle the call. If not, the SUA rejects the call with a 486 response. If there is spare capacity, the SUA consults the Contact List to determine which lines to ring (that is, for the proxy to send SIP INVITE to), and starts "hunting." The Contact List specifies the lines, the hunt method, and other options. EXAMPLES: ▪ `1,2,3,4,5,6,7,8,hunt=re;*;1` Lines 1 through 8 are participating (`1,2,3,4,5,6,7,8`). The Trunk SUA will hunt to each specified line in the specified order (`hunt=re`). The call stays with a selected line until the call is either answered, rejected, or cancelled by the caller (`*`). The Trunk SUA replies 486 right away if no line is available to ring at the moment (1). ▪ `?,hunt=al;30;0,cfwd=14089993326` A wildcard character is used to represent “all trunk lines.” All lines ring simultaneously (`hunt=al`). If there is no answer after 30 seconds (`30`), the call is forwarded to the specified number (`cfwd=14089993326`). ▪ `?,hunt=ra;12;1,cfwd=14089993326` A wildcard character is used to represent “all trunk lines.” The Trunk SUA hunts in random order (`hunt=ra`). If there is no answer within 12 seconds (`12`), the Trunk SUA chooses another line at random. If there is no answer after 1 round (`1`), the call is forwarded to forwarded to the specified number (`cfwd=14089993326`).

Contact List *(continued)*	NOTES:
	
	▪ The Trunk SUA rings only trunk lines (lines that are assigned to a trunk group through the *Voice tab > Line* page, *Trunk Group* field).
	  • The Trunk SUA will not ring any standalone lines that are included in the Contact List.
	  • The Trunk SUA will ring any trunk line that is included in the list, even if it is not assigned to this particular trunk.
	
	▪ You can instruct the SPA8000 to hunt only the phones that are on-hook, through the *Voice tab > SIP page, Trunking Parameters* section, *Hunt Policy* field. See **“Trunking Parameters section (SPA8000),” on page 138**.

Voice tab > Trunk Group page (SPA8000) >

Dial Plan section

Field	Description
Dial Plan	Dial plan script for this trunk. **NOTE:** The trunk SUA will also apply the Trunk Dial Plan on the number before sending out INVITE to the ITSP. This Trunk Dial Plan typically is redundant since the trunk should trust the number sent by the Line SUA. By default the trunk dial plan allows any non-empty number: `([*#0-9A-D][*#0-9A-D].)`

Voice tab > Trunk Group page (SPA8000) >

NAT Settings section

NAT Mapping Enable	To use externally mapped IP addresses and SIP/RTP ports in SIP messages, select yes. Otherwise, select no. The default is **no**.
NAT Keep Alive Enable	To send the configured NAT keep alive message periodically, select yes. Otherwise, select no. The default is **no**.
NAT Keep Alive Msg	Enter the keep alive message that should be sent periodically to maintain the current NAT mapping. If the value is $NOTIFY, a NOTIFY message is sent. If the value is $REGISTER, a REGISTER message without contact is sent. The default is $**NOTIFY**.
NAT Keep Alive Dest	Destination that should receive NAT keep alive messages. If the value is $PROXY, the messages are sent to the current proxy server or outbound proxy server. The default is $**PROXY**.

Voice tab > Trunk Group page (SPA8000) >

Proxy and Registration section

Proxy	SIP proxy server for all outbound requests.
Use Outbound Proxy	Enablse the use of an *Outbound Proxy.* If set to no, the *Outbound Proxy* and *Use OB Proxy in Dialog* parameters are ignored. The default is **no**.
Outbound Proxy	SIP Outbound Proxy Server where all outbound requests are sent as the first hop.
Use OB Proxy In Dialog	Whether to force SIP requests to be sent to the outbound proxy within a dialog. Ignored if the parameter *Use Outbound Proxy* is no, or the *Outbound Proxy* parameter is empty. The default is **yes**.
Register	Enable periodic registration with the *Proxy* parameter. This parameter is ignored if *Proxy* is not specified. The default is **yes**.
Make Call Without Reg	Allow making outbound calls without successful (dynamic) registration by the unit. If No, dial tone will not play unless registration is successful. The default is **no**.
Register Expires	Allow answering inbound calls without successful (dynamic) registration by the unit. If proxy responded to REGISTER with a smaller Expires value, the PAP2T will renew registration based on this smaller value instead of the configured value. If registration failed with an Expires too brief error response, the PAP2T will retry with the value given in the Min-Expires header in the error response. The default is **3600**.
Ans Call Without Reg	Expires value in sec in a REGISTER request. The PAP2T will periodically renew registration shortly before the current registration expired. This parameter is ignored if the *Register* parameter is no. Range: 0 – (231 – 1) sec

Use DNS SRV	Whether to use DNS SRV lookup for Proxy and Outbound Proxy. The default is **no**.
DNS SRV Auto Prefix	If enabled, the PAP2T will automatically prepend the Proxy or Outbound Proxy name with _sip._udp when performing a DNS SRV lookup on that name. The default is **no**.
Proxy Fallback Intvl	This parameter sets the delay (sec) after which the PAP2T will retry from the highest priority proxy (or outbound proxy) servers after it has failed over to a lower priority server. This parameter is useful only if the primary and backup proxy server list is provided to the PAP2T via DNS SRV record lookup on the server name. (Using multiple DNS A record per server name does not allow the notion of priority and so all hosts will be considered at the same priority and the PAP2T will not attempt to fall back after a fail over). The default is **3600**.
Proxy Redundancy Method	PAP2T will make an internal list of proxies returned in DNS SRV records. In normal mode, this list will contain proxies ranked by weight and priority. if Based on SRV port is configured the PAP2T does normal first, and also inspect the port number based on 1st proxy's port on the list. The default is **Normal**.
Voice Mail Server	Enter the URL or IP address of the server.
Mailbox Subscribe Expires	Expiry time to the voice mail server. The time to send another subscribe message to the voice mail server.

PSTN Line page (SPA3102)

On the SPA3102, you can use the *Voice tab > PSTN Line* page to configure your PSTN line. This page includes the following sections:

- **"Line Enable section" section on page 161**
- **"NAT Settings section" section on page 199**

- "Network Settings section" section on page 200
- "SIP Settings section" section on page 201
- "Proxy and Registration section" section on page 204
- "Subscriber Information section" section on page 205
- "Audio Configuration section" section on page 206
- "Dial Plans section" section on page 210
- "VoIP-To-PSTN Gateway Setup section" section on page 210
- "VoIP Users and Passwords (HTTP Authentication) section" section on page 212
- "FXO (PSTN) Timer Values (sec) section" section on page 213
- "PSTN Disconnect Detection section" section on page 215
- "International Control (Settings) section" section on page 218

Voice tab > PSTN Line page (SPA3102) >

Line Enable section

Line Enable	To enable this line for service, select yes. Otherwise, select no. The default is **yes**.
PSTN Contact List	Select the appropriate list: **None**, **Phone 1+2**, **Phone 1**, or **Phone 2**. The default is **Phone1+2**.

Voice tab > PSTN Line page (SPA3102) >

NAT Settings section

NAT Mapping Enable	To use externally mapped IP addresses and SIP/RTP ports in SIP messages, select yes. Otherwise, select no. The default is **no**.

NAT Keep Alive Enable	To send the configured NAT keep alive message periodically, select yes. Otherwise, select no. The default is **no**.
NAT Keep Alive Msg	Enter the keep alive message that should be sent periodically to maintain the current NAT mapping. If the value is $NOTIFY, a NOTIFY message is sent. If the value is $REGISTER, a REGISTER message without contact is sent. Escape sequence of %xx is also accepted. For example, %0d%0a is unescaped into \r\n (CRLF). The default is **$NOTIFY**.
NAT Keep Alive Dest	Destination that should receive NAT keep alive messages. If the value is $PROXY, the messages are sent to the current or outbound proxy. The default is **$PROXY**.

Voice tab > PSTN Line page (SPA3102) >

Network Settings section

SIP ToS/DiffServ Value	TOS/DiffServ field value in UDP IP packets carrying a SIP message. The default is **0x68**.
SIP CoS Value [0-7]	CoS value for SIP messages. The default is **3**.
RTP ToS/DiffServ Value	ToS/DiffServ field value in UDP IP packets carrying RTP data. The default is **0xb8**.
RTP CoS Value [0-7]	CoS value for RTP data. The default is **6**.

Network Jitter Level	Determines how jitter buffer size is adjusted by the ATA device. Jitter buffer size is adjusted dynamically. The minimum jitter buffer size is 30 milliseconds or (10 milliseconds + current RTP frame size), whichever is larger, for all jitter level settings. However, the starting jitter buffer size value is larger for higher jitter levels. This setting controls the rate at which the jitter buffer size is adjusted to reach the minimum. Select the appropriate setting: **low**, **medium**, **high**, **very high**, or **extremely high**. The default is **high**.
Jitter Buffer Adjustment	Controls how the jitter buffer should be adjusted. Select the appropriate setting: **up and down**, **up only**, **down only**, or **disable**. The default is **up and down**.

Voice tab > PSTN Line page (SPA3102) >

SIP Settings section

SIP Port	Port number of the SIP message listening and transmission port. The default is **5060**.
SIP 100REL Enable	To enable the support of 100REL SIP extension for reliable transmission of provisional responses (18x) and use of PRACK requests, select yes. Otherwise, select no. The default is **no**.
EXT SIP Port	The external SIP port number.
Auth Resync-Reboot	If this feature is enabled, the ATA device authenticates the sender when it receives the NOTIFY resync reboot (RFC 2617) message. To use this feature, select yes. Otherwise, select no. The default is **yes**.
SIP Proxy-Require	The SIP proxy can support a specific extension or behavior when it sees this header from the user agent. If this field is configured and the proxy does not support it, it responds with the message, unsupported. Enter the appropriate header in the field provided.

SIP Remote-Party-ID	To use the Remote-Party-ID header instead of the From header, select yes. Otherwise, select no. The default is **yes**.
SIP GUID	This field is not available with the PAP2T. The Global Unique ID is generated for each line for each device. When it is enabled, the ATA device adds a GUID header in the SIP request. The GUID is generated the first time the unit boots up and stays with the unit through rebooting and even factory reset. This feature was requested by Bell Canada (Nortel) to limit the registration of SIP accounts. The default is **yes**.
SIP Debug Option	SIP messages are received at or sent from the proxy listen port. This feature controls which SIP messages to log. Choices are as follows: ▪ **none**—No logging. ▪ **1-line**—Logs the start-line only for all messages. ▪ **1-line excl. OPT**—Logs the start-line only for all messages except OPTIONS requests/responses. ▪ **1-line excl. NTFY**—Logs the start-line only for all messages except NOTIFY requests/responses. ▪ **1-line excl. REG**—Logs the start-line only for all messages except REGISTER requests/responses. ▪ **1-line excl. OPT|NTFY|REG**—Logs the start-line only for all messages except OPTIONS, NOTIFY, and REGISTER requests/responses. ▪ **full**—Logs all SIP messages in full text. ▪ **full excl. OPT**—Logs all SIP messages in full text except OPTIONS requests/responses. ▪ **full excl. NTFY**—Logs all SIP messages in full text except NOTIFY requests/responses. ▪ **full excl. REG**—Logs all SIP messages in full text except REGISTER requests/responses. ▪ **full excl. OPT|NTFY|REG**—Logs all SIP messages in full text except for OPTIONS, NOTIFY, and REGISTER requests/responses. The default is none.
RTP Log Intvl	The interval for the RTP log.

Restrict Source IP	If Lines 1 and 2 use the same SIP Port value and the Restrict Source IP feature is enabled, the proxy IP address for Lines 1 and 2 is treated as an acceptable IP address for both lines. To enable the Restrict Source IP feature, select yes. Otherwise, select no. If configured, the PAP2T will drop all packets sent to its SIP Ports originated from an untrusted IP address. A source IP address is untrusted if it does not match any of the IP addresses resolved from the configured *Proxy* (or *Outbound Proxy* if *Use Outbound Proxy* is yes). The default is **no**.
Referor Bye Delay	Controls when the ATA device sends BYE to terminate stale call legs upon completion of call transfers. Multiple delay settings (Referor, Refer Target, Referee, and Refer-To Target) are configured on this screen. For the Referor Bye Delay, enter the appropriate period of time in seconds. The default is **4**.
Refer Target Bye Delay	For the Refer Target Bye Delay, enter the appropriate period of time in seconds. The default is **0**.
Referee Bye Delay	For the Referee Bye Delay, enter the appropriate period of time in seconds. The default is **0.**
Refer-To Target Contact	To contact the refer-to target, select yes. Otherwise, select no. The default is no.
Sticky 183	If this feature is enabled, the IP telephony ignores further 180 SIP responses after receiving the first 183 SIP response for an outbound INVITE. To enable this feature, select yes. Otherwise, select no. The default is **no**.

Voice tab > PSTN Line page (SPA3102) >

Proxy and Registration section

Proxy	SIP proxy server for all outbound requests.
Use Outbound Proxy	Enable the use of *Outbound Proxy*. If set to no, the *Outbound Proxy* parameter and *Use OB Proxy in Dialog* is ignored. The default is **no**.
Outbound Proxy	SIP Outbound Proxy Server where all outbound requests are sent as the first hop.
Use OB Proxy In Dialog	Whether to force SIP requests to be sent to the outbound proxy within a dialog. Ignored if the *Use Outbound Proxy* parameter is no, or if the *Outbound Proxy* parameter is empty. The default is **yes**.
Register	Enable periodic registration with the *Proxy*. This parameter is ignored if the *Proxy* parameter is not specified. The default is **yes**.
Make Call Without Reg	Allow making outbound calls without successful (dynamic) registration by the unit. If No, dial tone will not play unless registration is successful. The default is **no**.
Register Expires	Allow answering inbound calls without successful (dynamic) registration by the unit. If proxy responded to REGISTER with a smaller Expires value, the PAP2T will renew registration based on this smaller value instead of the configured value. If registration failed with an Expires too brief error response, the PAP2T will retry with the value given in the Min-Expires header in the error response. The default is **3600**.
Ans Call Without Reg	Expires value in sec in a REGISTER request. PAP2T will periodically renew registration shortly before the current registration expired. This parameter is ignored if the *Register* parameter is no. Range: 0 – (231 – 1) sec

Use DNS SRV	Whether to use DNS SRV lookup for Proxy and Outbound Proxy. The default is **no**.
DNS SRV Auto Prefix	If enabled, the PAP2T will automatically prepend the Proxy or Outbound Proxy name with _sip._udp when performing a DNS SRV lookup on that name. The default is **no**.
Proxy Fallback Intvl	This parameter sets the delay (sec) after which the PAP2T will retry from the highest priority proxy (or outbound proxy) servers after it has failed over to a lower priority server. This parameter is useful only if the primary and backup proxy server list is provided to the PAP2T via DNS SRV record lookup on the server name. (Using multiple DNS A record per server name does not allow the notion of priority and so all hosts will be considered at the same priority and the PAP2T will not attempt to fall back after a fail over). The default is **3600**
Proxy Redundancy Method	The PAP2T makes an internal list of proxies returned in DNS SRV records. In normal mode this list will contain proxies ranked by weight and priority. If the parameter *Based on SRV port* is configured, the PAP2T creates a list in normal mode first, and then inspects the port numbers based on the 1st proxy's port on the list. The default is **Normal**.

Voice tab > PSTN Line page (SPA3102) >

Subscriber Information section

Display Name	Display name for caller ID.
User ID	Extension number for this line.
Password	Password for this line.

Use Auth ID	To use the authentication ID and password for SIP authentication, select yes. Otherwise, select no to use the user ID and password. The default is no.
Auth ID	Authentication ID for SIP authentication.
Call Capacity	Maximum number of calls allowed on this line interface. Choices: {unlimited,1,2,3,...25 }. Default is 16. Note that the ATA device does not distinguish between incoming and outgoing calls when talking about call capacity. **NOTE:** unlimited = 16

Voice tab > PSTN Line page (SPA3102) >

Audio Configuration section

A codec resource is considered as allocated if it has been included in the SDP codec list of an active call, even though it eventually may not be the one chosen for the connection. So, if the G.729a codec is enabled and included in the codec list, that resource is tied up until the end of the call whether or not the call actually uses G.729a. If the G729a resource is already allocated and since only one G.729a resource is allowed per device, no other low-bit-rate codec may be allocated for subsequent calls; the only choices are G711a and G711u. On the other hand, two G.723.1/G.726 resources are available per device.

Therefore it is important to disable the use of G.729a in order to guarantee the support of two simultaneous G.723/G.726 codec.

Preferred Codec	Preferred codec for all calls. (The actual codec used in a call still depends on the outcome of the codec negotiation protocol.) Select one of the following: **G711u**, **G711a**, **G726-16**, **G726-24**, **G726-32**, **G726-40**, **G729a**, or **G723**. The default is **G711u**.
Silence Supp Enable	To enable silence suppression so that silent audio frames are not transmitted, select yes. Otherwise, select no. The default is **no**.

Use Pref Codec Only	To use only the preferred codec for all calls, select yes. (The call fails if the far end does not support this codec.) Otherwise, select no. The default is **no**.
Silence Threshold	Select the appropriate setting for the threshold: high, medium, or low. The default is **medium**.
G729a Enable	To enable the use of the G729a codec at 8 kbps, select yes. Otherwise, select no. The default is **yes**.
Echo Canc Enable	To enable the use of the echo canceller, select yes. Otherwise, select no. The default is **yes**.
G723 Enable	To enable the use of the G723a codec at 6.3 kbps, select yes. Otherwise, select no. The default is **yes**.
Echo Canc Adapt Enable	To enable the echo canceller to adapt, select yes. Otherwise, select no. The default is **yes**.
G726-16 Enable	To enable the use of the G726 codec at 16 kbps, select yes. Otherwise, select no. The default is **yes**.
Echo Supp Enable	To enable the use of the echo suppressor, select yes. Otherwise, select no. The default is **yes**.
G726-24 Enable	To enable the use of the G726 codec at 24 kbps, select yes. Otherwise, select no. The default is **yes**.
FAX CED Detect Enable	To enable detection of the fax Caller-Entered Digits (CED) tone, select yes. Otherwise, select no. The default is **yes**.
G726-32 Enable	To enable the use of the G726 codec at 32 kbps, select yes. Otherwise, select no. The default is **yes**.

FAX CNG Detect Enable	To enable detection of the fax Calling Tone (CNG), select yes. Otherwise, select no. The default is **yes**.
G726-40 Enable	To enable the use of the G726 codec at 40 kbps, select yes. Otherwise, select no. The default is **yes**.
FAX Passthru Codec	Select the codec for fax passthrough, G711u or G711a. The default is **G711u**.
DTMF Process INFO	This field is not available for the PAP2T. To use the DTMF process info feature, select yes. Otherwise, select no. The default is **yes**.
FAX Codec Symmetric	To force the ATA device to use a symmetric codec during fax passthrough, select yes. Otherwise, select no. The default is **yes**.
DTMF Process AVT	This field is not available for the PAP2T. To use the DTMF process AVT feature, select yes. Otherwise, select no. The default is **yes**.
FAX Passthru Method	Select the fax passthrough method: None, NSE, or ReINVITE. The default is **NSE**.
DTMF Tx Method	Select the method to transmit DTMF signals to the far end: InBand, AVT, INFO, Auto, InBand+INFO, or AVT+INFO. InBand sends DTMF using the audio path. AVT sends DTMF as AVT events. INFO uses the SIP INFO method. Auto uses InBand or AVT based on the outcome of codec negotiation. The default is **Auto**.
FAX Process NSE	To use the fax process NSE feature, select yes. Otherwise, select no. The default is **yes**.

Hook Flash Tx Method	Select the method for signaling hook flash events: **None**, **AVT**, or **INFO**. None does not signal hook flash events. AVT uses RFC2833 AVT (event = 16). INFO uses SIP INFO with the single line signal=hf in the message body. The MIME type for this message body is taken from the Hook Flash MIME Type setting. The default is **None**.
FAX Disable ECAN	If enabled, this feature automatically disables the echo canceller when a fax tone is detected. To use this feature, select yes. Otherwise, select no. The default is **no**.
Release Unused Codec	This feature allows the release of codecs not used after codec negotiation on the first call, so that other codecs can be used for the second line. To use this feature, select yes. Otherwise, select no. The default is **yes**.
FAX Enable T38	To enable the use of the ITU-T T.38 standard for faxing, select yes. Otherwise, select no. The default is **yes**.
FAX Tone Detect Mode	This parameter has three possible values: caller or callee - SPA will detect FAX tone whether it is callee or caller caller only - SPA will detect FAX tone only if it is the caller callee only - SPA will detect FAX tone only if it is the callee The default is **caller or callee**.
Symmetric RTP	(SPA3102 and SPA8800 only) Enable symmetric RTP operation. If enabled, the ATA sends RTP packets to the source address and port of the last received valid inbound RTP packet. If disabled (or before the first RTP packet arrives) the ATA sends RTP to the destination as indicated in the inbound SDP. The default is **yes**.

Voice tab > PSTN Line page (SPA3102) >

Dial Plans section

Dial Plan 1/2/3/4/5/6/7/8	Dial plan script for this line. The default is (**xx**.) Dial plans in the dial plan pool to be associated with a VoIP Caller or a PSTN Caller. Each dial plan in the pool is referenced by a index 1 to 8 corresponding to Dial Plan 1 to 8. The dial plan syntax is the same as that used for Line 1. See **"Dial Plan section," on page 180**.

Voice tab > PSTN Line page (SPA3102) >

VoIP-To-PSTN Gateway Setup section

VoIP-To-PSTN Gateway Enable	Enable or disable VoIP-To-PSTN Gateway functionality. The default is **yes**.
VoIP Caller Authentication Method	Method to be used to authenticate a VoIP Caller to access the PSTN gateway. Choose from {none, PIN, HTTP Digest. The default is **none**.
VoIP PIN Max Retry	Number of trials to allow VoIP caller to enter a PIN number (used only if authentication method is set to PIN). The default is **3**.
One Stage Dialing	Enable one-stage dialing (applicable if authentication method is none, or HTTP Digest, or caller is in the Access List). The default is **yes**.

Line 1 VoIP Caller DP	Index of the dial plan in the dial plan pool to be used when the VoIP Caller is calling from Line 1 of the same SPA3102 unit during normal operation (in other words, not due to fallback to PSTN service when Line 1 VoIP service is down). Choose from {none, 1, 2, 3, 4, 5, 6, 7, 8} Authentication is skipped for Line 1 VoIP caller. The default is **1**.
Default VoIP Caller DP	Index of the dial plan in the dial plan pool to be used when the VoIP Caller is not authenticated. Choose from {none, 1, 2, 3, 4, 5, 6, 7, 8}. The default is **1**.
Line 1 Fallback DP	Index of the dial plan in the dial plan pool to be used when the VoIP Caller is calling from Line 1 of the same SPA3102 unit due to fallback to PSTN service when Line 1 VoIP service is down. Choose from {none, 1, 2, 3, 4, 5, 6, 7, 8}. The default is **1**.
VoIP Caller ID Pattern	A comma-separated list of caller number templates such that callers with numbers not matching any of these templates are rejected for PSTN gateway service, regardless of the setting of the authentication method. The comparison is applied before the access list is applied. If this parameter is blank (not specified), all callers are considered for PSTN gateway service. For example: 1408*, 1512???1234. **NOTE:** '?' matches any single digit; '*' matches any number of digits. The default is blank.
VoIP Access List	A comma separated list of IP address templates, such that callers with source IP address matching any of the templates will be accepted for PSTN gateway service without further authentication. For example: 192.168.*.*, 66.43.12.1??. The default is blank.
VoIP Caller 1/2/3/4/5/6/7/8 PIN	One of 8 PIN numbers that can be specified to control access to the PSTN gateway by a VoIP Caller, when the *VoIP Caller Authentication Method* parameter is set to PIN. The default is blank.

VoIP Caller 1/2/3/4/5/6/7/8 DP	Index of the dial plan in the dial plan pool to be associated with the VoIP caller who enters the PIN that matches *VoIP Caller 1/2/3/4/5/6/7/8 PIN*. The default is **1**.

Voice tab > PSTN Line page (SPA3102) >

VoIP Users and Passwords (HTTP Authentication) section

VoIP User 1/2/3/4/5/6/7/8 Auth ID	The first of 8 user-id's that a VoIP Caller can use to authenticate itself to the SPA using the HTTP Digest method (in other words, by embedding an Authorization header in the SIP INVITE message sent to the SPA. If the credentials are missing or incorrect, the SPA will challenge the caller with a 401 response). The VoIP caller whose authentication user-id equals to this ID is referred to VoIP User 1 of this SPA. **NOTE:** If the caller specifies an authentication user-id that does not match any of the VoIP User Auth ID's, the INVITE will be rejected with a 403 response. The default is blank.
VoIP User 1/2/3/4/5/6/7/8 DP	Index of the dial plan in the dial plan pool to be used with VoIP User 1. If Authentication is disabled, the default dial plan is used for all unknown VoIP users. The default is **1**.
VoIP User 1/2/3/4/5/6/7/8 Password	The password to be used with VoIP User 1. The user assumes the identity of VoIP User 1 must therefore compute the credentials using this password, or the INVITE will be challenged with a 401 response The default is blank.

Voice tab > PSTN Line page (SPA3102) >

Ring Settings section

Default Ring	1-8, Follow Line Cfg

Voice tab > PSTN Line page (SPA3102) >

FXO (PSTN) Timer Values (sec) section

VoIP Answer Delay	Delay in seconds before auto-answering inbound VoIP calls for the FXO account. The range is 0-255. The default is **3**.
PSTN Answer Delay	Delay in seconds before auto-answering inbound PSTN calls after the PSTN starts ringing. The range is 0-255. The default is **16**.
VoIP PIN Digit Timeout	Timeout to wait for the 1st or subsequent PIN digits from a VoIP caller. The range is 0-255. The default is **10**.
PSTN PIN Digit Timeout	Timeout to wait for the 1st or subsequent PIN digits from a PSTN caller. The range is 0-255. The default is **10**.
VoIP DLG Refresh Intvl	Interval between (SIP) Dialog refresh messages sent by the SPA to detect if the VoIP call-leg is still up. If value is set to 0, SPA will not send refresh messages and VoIP call-leg status is not checked by the SPA. The refresh message is a SIP ReINVITE and the VoIP peer must response with a 2xx response. If VoIP peer does not reply or response is not greater than 2xx, the SPA will disconnect both PSTN and VoIP call legs automatically. The range is 0-255. The default is **30**.

PSTN Ring Thru Delay	Delay in seconds before starting to ring thru Line 1 after the PSTN starts ringing. In order for Line 1 to have the caller-id information, the delay should be set to larger than the delay required to complete the PSTN caller-id delivery (such as 5s). The range is 0-255. The default is **5**.
PSTN-To-VoIP Call Max Dur	Limit on the duration of a PSTN-To-VoIP Gateway Call. Unit is in seconds. 0 means unlimited. The range is 0-2147483647. The default is **0**.
VoIP-To-PSTN Call Max Dur	Limit on the duration of a VoIP-To-PSTN Gateway Call. Unit is in seconds. 0 means unlimited. The range is 0-2147483647. The default is **0**.
PSTN Dialing Delay	Delay after hook before the SPA dials a PSTN number. The range is 0-255. The default is **1**.
PSTN Ring Timeout	Delay after a ring burst before the SPA decides that PSTN ring has ceased. The range is 0-255. The default is **5**.
PSTN Dial Digit Len	Determines the on/off time when transmitting digits through the FXO port. The syntax is *on-time/off-time*, where *on-time* and *off-time* are expressed in seconds with up to two decimal places, within the permitted range, which is from .05 to 3.00. The default is **.1/.1**. If this value is blank, the default is used.
PSTN Hook Flash Len	The length of the hook flash in seconds. During a PSTN-to-VoIP gateway call, the ATA device processes the out-of-band hook flash signal sent from the VoIP peer through a hook-flash (momentary on-hook signal) on the FXO port. This allows the VoIP peer to initiate a three-way conference call and subsequent call transfer. The duration of the on-hook signal can be configured using this parameter. The default is **0.25**. The permitted range is limited to 0.02 to 1.6 seconds.

PSTN Ring Thru CWT Delay	Specify the delay before incoming PSTN calls will ring Line 1 using a Call Waiting Tone. The default is **3**.
PSTN Ring Timeout	Specify the delay after a ring burst before the Gateway decides that the PSTN ring has ended. The default is **5**.
PSTN Dialing Delay	Specify the delay after the PSTN phone line is on-hook before the Gateway dials a PSTN number. The default is **1**.
PSTN Dial Digit Len	Specify the on/off time when the Gateway transmits digits through the Line (FXO) port. The syntax is on-time/off-time, expressed in seconds with up to two decimal places. The permitted range is 0.05 to 3.00. The default is **.1/.1**.
PSTN Hook Flash Len	Default is **.25**.

Voice tab > PSTN Line page (SPA3102) >

PSTN Disconnect Detection section

Detect CPC	CPC is a brief removal of tip-and-ring voltage. If enabled, the SPA will disconnect both call legs when this signal is detected during a gateway call. The default is **yes**.
Detect Polarity Reversal	If enabled, SPA will disconnect both call legs when this signal is detected during a gateway call. If it is a PSTN gateway call, the 1st polarity reversal is ignored and the 2nd one triggers the disconnection. For VoIP gateway call, the 1st polarity reversal triggers the disconnection. The default is **yes**.
Detect (PSTN) Long Silence	If enabled, SPA will disconnect both call legs when the PSTN side has no voice activity for a duration longer than the length specified in the *Long Silence Duration* parameter during a gateway call The default is **yes**.
Min CPC Duration	Specify the minimum duration of a low tip-and-ring voltage (below 1V) for the Gateway to recognize it as a CPC signal or PSTN line removal. The default is **0.2**.

Detect Disconnect Tone	If enabled, SPA will disconnect both call legs when it detects the disconnect tone from the PSTN side during a gateway call. Disconnect tone is specified in the *Disconnect Tone* parameter, which depends on the region of the PSTN service. The default is **yes**.
(PSTN) Long Silence Duration	This value is minimum length of PSTN silence (or inactivity) in seconds to trigger a gateway call disconnection if *Detect Long Silence* is yes. The default is **30**.
Silence Threshold	This parameter adjusts the sensitivity of PSTN silence detection. Choose from {very low, low, medium, high, very high}. The higher the setting, the easier to detect silence and hence easier to trigger a disconnection. The default is **medium**.

Disconnect Tone	This value is the tone script which describes to the SPA the tone to detect as a disconnect tone. The syntax follows a standard Tone Script with some restrictions. Default value is standard US reorder (fast busy) tone, for 4 seconds. Restrictions: ▪ 2 frequency components must be given. If single frequency is desired, the same frequency is used for both ▪ The tone level value is not used. –30 (dBm) should be used for now. ▪ Only 1 segment set is allowed ▪ Total duration of the segment set is interpreted as the minimum duration of the tone to trigger detection ▪ 6 segments of on/off time (seconds) can be specified. A 10% margin is used to validated cadence characteristics of the tone. The Disconnect Tone Script values for various countries follow: **US**—480@-30,620@-30;4(.25/.25/1+2) **UK**—400@-30,400@-30; 2(3/0/1+2) **France**—440@-30,440@-30; 2(0.5/0.5/1+2) **Germany**—440@-30,440@-30; 2(0.5/0.5/1+2) **Netherlands**—425@-30,425@-30; 2(0.5/0.5/1+2) **Sweden**—425@-10; 10(0.25/0.25/1) **Norway**—425@-10; 10(0.5/0.5/1) **Italy**—425@-30,425@-30; 2(0.2/0.2/1+2) **Spain**—425@-10; 10(0.2/0.2/1,0.2/0.2/1,0.2/0.6/1) **Portugal**—425@-10; 10(0.5/0.5/1) **Poland**—425@-10; 10(0.5/0.5/1) **Denmark**—425@-10; 10(0.25/0.25/1) **New Zealand**—400@-15; 10(0.25/0.25/1) **Australia**—425@-13; 10(0.375/0.375/1)

Voice tab > PSTN Line page (SPA3102) >

International Control (Settings) section

FXO Port Impedance	Desired impedance of the FXO Port. Choose from {**600**, **900, 370+620, 270+750‖150nF, 220+820‖120nF**, **370 + 620 ‖ 310nf**, **320 + 1050 ‖ 230nf**, **370 + 820 ‖ 110 nf**, **275 + 780 ‖ 115nf**, **120 + 820 ‖ 110nf**, **350 + 1000 ‖ 210nf**, **0 + 900 ‖ 130nf**} The default is **600**. The impedance values for various countries follows: **US**—600 **EU (UK, Germany, Netherlands, Sweden, Norway, Italy, Spain, Portugal, Poland, and Denmark)**—270+750‖150nF **France**—270+750‖150nF **Australia**—220+820‖120nF **New Zealand**—370+620‖310nF
Ring Frequency Min	Specify the lower limit of the ring frequency used to detect the ring signal. The default is **10**.
SPA To PSTN Gain	dB of digital gain (or attenuation if negative) to be applied to the signal sent from the SPA to the PSTN side. The range is -15 to 12. The default is **0**.
Ring Frequency Max	Specify the higher limit of the ring frequency used to detect the ring signal. The default is **100**.
PSTN To SPA Gain	dB of digital gain (or attenuation if negative) to be applied to the signal sent from the PSTN side to the SPA. The range is -15 to 12. The default is **0**.
Ring Validation Time	Specify the minimum signal duration required by the Gateway for recognition as a ring signal. The default is **256 ms**.
Tip/Ring Voltage Adjust	Choices are {3.1, 3.2, 3.35, 3.5}. The default is **3.5**.

Operational Loop Current Min	Choices for mA are: {10, 12, 14, 16). The default is **10**.
On-Hook Speed	Choose from {Less than 0.5ms, 3ms (ETSI), 26ms (Australia)}. The default is **Less than 0.5ms**.
Current Limiting Enable	Enable or disable current limiting. The default is **no**.
Ring Frequency Min	Minimum ring frequency to detect. The range is 5-100. The default is **10**.
Ring Frequency Max	Maximum ring frequency to detect. The range is 5-100. The default is **100**.
Ring Validation Time	Choose from {100, 150, 200, 256, 384, 512, 640, 1024} (ms). The default is **256ms**.
Ring Indication Delay	Choose from {0, 512, 768, 1024, 1280, 1536, 1792} (ms). The default is **512ms**.
Ring Timeout	Choose from {0, 128, 256, 384, 512, 640, 768, 896, 1024, 1152, 1280, 1408, 1536, 1664, 1792, 1920} (ms). The default is **640 ms**.
Ring Threshold	Choose from {13.5–16.5, 19.35–2.65, 40.5–49.5} (Vrms). The default is **13.5-16.5 Vrms**.
Ringer Impedance	Choose from {High, Synthesized(Poland, S.Africa, Slovenia)}. The default is **high**.
Line-In-Use Voltage	Determines the voltage threshold at which the SPA-3000 assumes the PSTN is in use by another handset sharing the same line (and will declare PSTN gateway service not available to incoming VoIP callers). The default value is **40v**.

User page

Depending on the model of ATA device, there may be one or more User pages. You can use this page to configure the user settings.

On the SPA8000, these settings can be configured on the Line pages (Line 1, Line 2, and so on). On the SPA8800, theses settings can be configured on the Phone pages (Phone 1, Phone 2, and so on).

This page includes the following sections:

- **"Call Forward Settings section" section on page 221**
- **"Selective Call Forward Settings section" section on page 222**
- **"Speed Dial Settings section" section on page 222**
- **"Supplementary Service Settings section" section on page 223**
- **"Distinctive Ring Settings section" section on page 224**
- **"Ring Settings section" section on page 225**

NOTE When a call is made from Line 1 or Line 2, the ATA device shall use the user and line settings for that line; there is no user login support. Per user parameter tags must be appended with [1] or [2] (corresponding to line 1 or 2) in the configuration profile. It is omitted below for readability.

Voice tab > User page >

Call Forward Settings section

Cfwd All Dest	Forward number for Call Forward All Service In addition to normal call forward destination as used in the other ATAs, on the SPA3102, you can specify the following additional parameters: gw0 – forward the caller to use the PSTN gateway <pstn-number>@gw0 – forward to caller to the PSTN number (dialed automatically by the SPlocalA through the PSTN gateway) The default is blank.
Cfwd Busy Dest	Forward number for Call Forward Busy Service. Same as Cfwd All Dest. The default is blank.
Cfwd No Ans Dest	Forward number for Call Forward No Answer Service. Same as Cfwd All Dest. In addition to normal call forward destination as used in the other ATAs, on the SPA3102, you can specify the following additional parameters: gw0 – forward the caller to use the PSTN gateway <pstn-number>@gw0 – forward to caller to the PSTN number (dialed automatically by the SPA through the PSTN gateway) The default is blank.
Cfwd No Ans Delay	Delay in sec before Call Forward No Answer triggers. Same as Cfwd All Dest. The default is **20**.

Voice tab > User page >

Selective Call Forward Settings section

Cfwd Sel1- 8 Caller	Caller number pattern to trigger Call Forward Selective 1, 2, 3, 4, 5, 6, 7, or 8. The default is blank.
Cfwd Sel1 - 8 Dest	Forward number for Call Forward Selective 1, 2, 3, 4, 5, 6, 7, or 8. Same as Cfwd All Dest. The default is blank.
Block Last Caller	ID of caller blocked via the Block Last Caller service. The default is blank.
Accept Last Caller	ID of caller accepted via the Accept Last Caller service. The default is blank.
Cfwd Last Caller	The Caller number that is actively forwarded to *Cfwd Last Dest* by using the Call Forward Last activation code The default is blank.
Cfwd Last Dest	Forward number for the *Cfwd Last Caller* parameter. Same as Cfwd All Dest. The default is blank.

Voice tab > User page >

Speed Dial Settings section

This section does not apply to the WIP310 wireless phone.

Speed Dial 2-9	Target phone number (or URL) assigned to speed dial 2, 3, 4, 5, 6, 7, 8, or 9. The default is blank.

Voice tab > User page >

Supplementary Service Settings section

The ATA device provides native support of a large set of enhanced or supplementary services. All of these services are optional. The parameters listed in the following table are used to enable or disable a specific supplementary service. A supplementary service should be disabled if a) the user has not subscribed for it, or b) the Service Provider intends to support similar service using other means than relying on the ATA device.

CW Setting	Call Waiting on/off for all calls. The default is **yes**.
Block CID Setting	Block Caller ID on/off for all calls. The default is **no**.
Block ANC Setting	Block Anonymous Calls on or off. The default is **no**.
DND Setting	DND on or off. The default is **no**.
CID Setting	Caller ID Generation on or off. The default is **yes**.
CWCID Setting	Call Waiting Caller ID Generation on or off. The default is **yes**.
Dist Ring Setting	Distinctive Ring on or off. The default is **yes**.
Secure Call Setting	If yes, all outbound calls are secure calls by default. The default is **no**.
Message Waiting	This value is updated when there is voice mail notification received by the ATA device. The user can also manually modify it to clear or set the flag. Setting this value to yes can activate stutter tone and VMWI signal. This parameter is stored in long term memory and will survive after reboot or power cycle. The default is **no**.

Accept Media Loopback Request	Controls how to handle incoming requests for loopback operation. Choices are: **Never**, **Automatic**, and **Manual**, where: ▪ **never**—never accepts loopback calls; reply 486 to the caller ▪ **automatic**—automatically accepts the call without ringing ▪ **manual** —rings the phone first, and the call must be picked up manually before loopback starts. The default is **Automatic**.
Media Loopback Mode	The loopback mode to assume locally when making call to request media loopback. Choices are: **Source** and **Mirror.** Default is **Source**. Note that if the ATA device answers the call, the mode is determined by the caller.
Media Loopback Type	The loopback type to use when making call to request media loopback operation. Choices are Media and Packet. Default is **Media**. Note that if the ATA device answers the call, then the loopback type is determined by the caller (the ATA device always picks the first loopback type in the offer if it contains multiple types.)

Voice tab > User page >

Distinctive Ring Settings section

Caller number patterns are matched from Ring 1 to Ring 8. The first match (not the closest match) will be used for alerting the subscriber.

Ring1 - 9 Caller	Caller number pattern to play Distinctive Ring/CWT 1, 2, 3, 4, 5, 6, 7, 8, or 9. The default is **blank**.

Voice tab > User page >

Ring Settings section

Default Ring	Default ringing pattern, 1 – 8, for all callers. The default is **1**.
Default CWT	Default CWT pattern, 1 – 8, for all callers. The default is **2**.
Hold Reminder Ring	Ring pattern for reminder of a holding call when the phone is on-hook. The default is **None**.
Call Back Ring	Ring pattern for call back notification. The default is **None**.
Cfwd Ring Splash Len	Duration of ring splash when a call is forwarded (0 – 10.0s). The default is **0**.
Cblk Ring Splash Len	Duration of ring splash when a call is blocked (0 – 10.0s). The default is **0**.
VMWI Ring Splash Len	Duration of ring splash when new messages arrive before the VMWI signal is applied (0 – 10.0s). The default is **.5**.
VMWI Ring Policy	The parameter controls when a ring splash is played when a the VM server sends a SIP NOTIFY message to the ATA device indicating the status of the subscriber's mail box. 3 settings are available: ▪ **New VM Available**—ring as long as there is 1 or more unread voice mail ▪ **New VM Becomes Available**—ring when the number of unread voice mail changes from 0 to non-zero ▪ **New VM Arrives**—ring when the number of unread voice mail increases. The default is **New VM Available**.

Ring On No New VM	If enabled, the ATA device will play a ring splash when the VM server sends SIP NOTIFY message to the ATA device indicating that there are no more unread voice mails. Some equipment requires a short ring to precede the FSK signal to turn off VMWI lamp. The default is **no**.

PSTN User page (SPA3102)

On the SPA3102, you can use the *Voice tab > PSTN User* page to configure the PSTN user settings. This page includes the following sections:

- **"PSTN-To-VoIP Selective Call Forward Settings section" section on page 226**
- **"PSTN-To-VoIP Speed Dial Settings section" section on page 227**
- **"PSTN Ring Thru Line 1 Distinctive Ring Settings section" section on page 227**
- **"PSTN Ring Thru Line 1 Ring Settings section" section on page 227**

Voice tab > PSTN User page (SPA3102) >

PSTN-To-VoIP Selective Call Forward Settings section

Cfwd Sel1-8 Caller	Eight PSTN Caller Number Patterns to be blocked for VoIP gateway services or forwarded to a certain VoIP number. If the caller is blocked, the SPA will not auto-answers the call.
Cfwd Sel1-8 Dest	Eight VoIP destinations to forward a PSTN caller matching the *Cfwd Sel x Caller parameter.* If this entry is blank, the PSTN caller is blocked for VoIP service.

Voice tab > PSTN User page (SPA3102) >

PSTN-To-VoIP Speed Dial Settings section

Speed Dial 1-9	The VoIP number to call when the PSTN caller dials a single digit '2'

Voice tab > PSTN User page (SPA3102) >

PSTN Ring Thru Line 1 Distinctive Ring Settings section

Ring1-8 Caller	Eight PSTN Caller Number Patterns such that the corresponding ring will be used to ring through Line 1 if the PSTN caller matches this pattern.

Voice tab > PSTN User page (SPA3102) >

PSTN Ring Thru Line 1 Ring Settings section

Default Ring	The default ring to be used to ring through Line 1. Choose from {1,2,3,4,5,6,7,8,Follow Line 1}. If Follow Line 1 is selected, the ring to be used is determined by Line 1's distinctive ring settings. The default is **1**.

C

Troubleshooting

This appendix provides solutions to problems that may occur during the installation and operation of the ATA devices.

NOTE If you can't find an answer here, visit www.cisco.com/en/US/products/ps10024/tsd_products_support_series_home.html

Q. I want to use a different computer to access the administration web server. The address I entered did not work.

A. Use the Interactive Voice Response Menu to find out the Internet IP address.

Follow these steps:

1. Use a telephone connected to the Phone 1 port of the ATA device.
2. Press **** (in other words, press the star key four times).
3. After the greeting plays, press **110#**.
4. Write down the IP address as it is announced.
5. Press **7932#**.
6. Press **1** to enable WAN access to the administration web server.
7. Open the web browser on a networked computer.
8. Start Internet Explorer and enter the IP address of the ATA device.

Q. I'm trying to access the ATA administration web server, but I do not see the login screen. Instead, I see a screen saying, "404 Forbidden."

A. If you are using Windows Explorer, perform the following steps until you see the administration web server login screen (Mozilla requires similar steps).

1. Click **File**. Make sure *Work Offline* is NOT checked.
2. Press **CTRL + F5**. This is a hard refresh, which forces Windows Explorer to load new webpages, not cached ones.
3. Click **Tools**. Click **Internet Options**. Click the **Security** tab. Click the **Default level** button. Make sure the security level is Medium or lower. Then click the **OK** button.

Q. How do I save my current configuration?

A. Currently, the only way is to do HTTPGET from an HTTP client, from which you get the entire HTML page. Alternatively, from your browser you can select **File** > **Save as** > **HTML** from any of the administration web server pages. Do this in Admin, Advanced mode.

This saves all the tabs into one HTML file. This HTML file is helpful to provide to our support team when you have a problem or technical question.

Q. How do I debug my ATA device? Is there a syslog?

A. The ATA devices send out debug information via syslog to a syslog server. The ports can be configured (by default the port is 514).

1. Make sure you do not have firewall running on your PC that could block port 514.
2. On the administration web server System tab, set *Debug Server* as the IP address and port number of your syslog server. Note that this address has to be reachable from the ATA device.
3. Also, set *Debug level* to **3.**
   You do not need to change the value of the *syslog server* parameter.
4. To capture SIP signaling messages, under the Line tab, set *SIP Debug Option* to **Full**.
   The file output is syslog.<portnum>.log (for the default port setting, syslog.514.log).

Q. How do I access the ATA device if I forget my password?

A. By default, the User and Admin accounts have no password. If the ITSP set the password for either account and you do not know what it is, you need to contact the ITSP. If the password for the user account was configured after you received the ATA device, you can reset the device to the user factory default, which preserves any provisioning completed by the ITSP. If the Admin account needs to be reset, you have to perform a full factory reset, which also erases any provisioning.

To reset the ATA device to the factory defaults, perform the following steps:

1. Connect an analog phone to the ATA device and access the IVR by pressing the asterisk key four times: ****

   Press the appropriate code to reset the unit:

   - Press 877778# to reset the unit to the defaults as it shipped from the ITSP. This will reset the User account password to the default of blank.
   - Press 73738# to perform a full reset of unit to the factory default settings. The Admin account password will be reset to the default of blank.

2. Press 1 to confirm the operation.
   Press * to cancel the operation.

3. Log in to the unit using the User or Admin account without a password and reconfigure the unit as necessary.

Q. My ATA device is behind a NAT device or firewall and I'm unable to make a call or I'm only receiving a one-way connection. What should I do?

A. Complete the following steps.

1. Configure your router to port forward "TCP port 80" to the IP address currently being used by your ATA device. If you do this often, we suggest that you use static IP address for the ATA device, instead of DHCP. (For help with port forwarding, consult your router documentation)

2. On the Line tab of the administration web server, change the value of *Nat Mapping Enable* to **yes**. On the SIP tab; change *Substitute VIA Addr* to **yes**, and the *EXT IP* parameter to the IP address of your router.

3. Make sure you are not blocking the UDP PORT 5060,5061 and port for UDP packets in the range of 16384-16482. Also, disable "SPI" if this feature is provided by your firewall. Identify the SIP server to which the ATA device is registering, if it supports NAT, using the *Outbound Proxy* parameter.

4. Add a STUN server to allow traversal of UDP packets through the NAT device. On the SIP tab of the administration web server, set *STUN Enable* to **yes**, and enter the IP address of the STUN server in *STUN Server*.

   STUN (Simple Traversal of UDP through NATs) is a protocol defined by RFC 3489, that allows a client behind a NAT device to find out its public address, the type of NAT it is behind, and the port associated on the Internet connection with a particular local port. This information is used to set up UDP communication between two hosts that are both behind NAT routers. Open source STUN software can be obtained at the following website: http://www.voip-info.org/wiki-Open+Source+VOIP+Software

NOTE STUN does not work with a symmetric NAT router. Enable debug through syslog (see FAQ#10), and set *STUN Test Enable* to **yes**. The messages indicate whether you have symmetric NAT or not.

D

Environmental Specifications

This appendix provides the specifications for the following ATAs:

- "PAP2T," on page 233
- "SPA2102," on page 234
- "SPA3102," on page 234
- "SPA8000," on page 235
- "SPA8800," on page 235
- "WRTP54G," on page 236

PAP2T

Device Dimensions	3.98" x 3.98" x 1.10" (101 x 101 x 28 mm) W x H x D
Unit Weight	5.40 oz (153g)
Power	100-240V 50-60Hz, AC Input
Certification	FCC (Part 15 Class B), cUL, CE, IC-003, A-Tick
Operating Temp	32 to 113º F(0 to 45ºC)
Storage Temp	-17º to 158ºF (-27 to 70ºC)
Operating Humidity	10% to 90% relative humidity, Non-Condensing
Storage Humidity	10% to 90% relative humidity, Non-Condensing

SPA2102

Device Dimensions	3.98” x 3.98” x 1.10” (101 x 101 x 28 mm) W x H x D
Unit Weight	5.29 oz (0.15kg)
Power	100-240V 50-60Hz (26-34VA), AC Input
Certification	FCC (Part 15 Class B), CE, ICES-003
Operating Temp	32º to 113º F(0 to 45ºC)
Storage Temp	-13º to 185ºF (-25 to 85ºC)
Operating Humidity	10% to 90% relative humidity, Non-Condensing
Storage Humidity	10% to 90% relative humidity, Non-Condensing

SPA3102

Device Dimensions	3.98” x 3.98” x 1.10” (101 x 101 x 28 mm)
Unit Weight	5.11 oz (0.145kg)
Power	100-240V 50-60Hz (26-34VA), AC Input
Certification	FCC (Part 15 Class B), CE, ICES-003, A-Tick Certification, RoH
Operating Temp	32º to 113º F(0 to 45ºC)
Storage Temp	-13º to 185ºF (-25 to 85ºC)
Operating Humidity	10% to 90% relative humidity, Non-Condensing
Storage Humidity	10% to 90% relative humidity, Non-Condensing

SPA8000

Device Dimensions	6.69” x 1.54” x 8.66” (170 x 39 x 220 mm)
Unit Weight	2.85 lbs (1.30kg)
Power	100-240V 50-60Hz (26-34VA), AC Input
Certification	FCC (Part 15 Class B), CE, ICES-003, A-Tick Certification, RoH, UL
Operating Temp	32º to 113º F(0 to 45ºC)
Storage Temp	-13º to 185ºF (-25 to 85ºC)
Operating Humidity	10% to 90% relative humidity, Non-Condensing
Storage Humidity	10% to 90% relative humidity, Non-Condensing

SPA8800

Device Dimensions	6.69” x 1.54” x 8.66” (170 x 39 x 220 mm)
Unit Weight	2.85 lbs (1.30kg)
Power	100-240V 50-60Hz (26-34VA), AC Input
Certification	FCC (Part 15 Class B), CE, ICES-003, A-Tick Certification, RoH, UL
Operating Temp	32º to 113º F(0 to 45ºC)
Storage Temp	-13º to 185ºF (-25 to 85ºC)
Operating Humidity	10% to 90% relative humidity, Non-Condensing
Storage Humidity	10% to 90% relative humidity, Non-Condensing

WRTP54G

Device Dimensions	6.69 ” x 6.69” x 1.22” (170 x 170 x 31 mm)
Unit Weight	13.60 oz (.39 kg)
Power	External, 12V DC, 1.0A
Certification	FCC (Part 15 Class B), CE, UL
Operating Temp	32º to 104º F(0 to 40ºC)
Storage Temp	-4º to 140ºF (-20 to 60ºC)
Operating Humidity	10% to 85% relative humidity, Non-Condensing
Storage Humidity	5% to 90% relative humidity, Non-Condensing

E

Where to Go From Here

This appendix describes additional resources that are available to help you and your customer obtain the full benefits of the SPA9000 Voice System.

- **"Product Resources," on page 237**
- **"Related Documentation," on page 238**

Product Resources

Website addresses in this document are listed without **http://** in front of the address because most current web browsers do not require it. If you use an older web browser, you may have to add **http://** in front of the web address.

Resource	Location
Technical Documentation	http://www.cisco.com/en/US/products/ps10024/prod_maintenance_guides_list.html
Firmware Downloads	Go to tools.cisco.com/support/downloads, and enter the model number in the Software Search box.
Cisco Community Central > Small Business Support Community	www.myciscocommunity.com/community/smallbizsupport/voiceandconferencing/voice
Phone Support	www.cisco.com/en/US/support/tsd_cisco_small_business_support_center_contacts.html
Warranty and End-User License Agreement	www.cisco.com/go/warranty

Resource	Location
Open Source License Notices	www.cisco.com/go/osln
Regulatory Compliance and Safety Information	http://www.cisco.com/en/US/products/ps10024/prod_maintenance_guides_list.html
Cisco Partner Central (Login Required)	www.cisco.com/web/partners/sell/smb
Cisco Small Business Home	www.cisco.com/smb

Related Documentation

The following table describes the various documents that Cisco provides to help you to install, configure, and manage the SPA9000 Voice System and its components.

These documents and more are available at the following URL: www.cisco.com/en/US/products/ps10030/tsd_products_support_series_home.html

Document Title	Description	Intended Audience
SPA9000 Voice System Installation and Configuration Guide Using the Setup Wizard	Installation, configuration and maintenance of the SPA9000 Voice System by using the Setup Wizard.	End Users, VARs, and Service Providers
SPA9000 Voice System Installation and Configuration Guide - Web-UI (Legacy) Based Product Configuration	Manual installation of the SPA9000 Voice System, by using the Web User Interface, instead of the Cisco SPA900 Voice System Setup Wizard.	End Users, VARs, and Service Providers

Document Title	Description	Intended Audience
SPA9000 Voice System Administration Guide	▪ Administration and configuration of system features using the SPA9000 and SPA400 ▪ Deployment options for ITSP, PSTN, and ISDN services ▪ SPA9000, SPA400, SPA900 series phones	VARs and Service Providers
SPA9x2 Phone Administration Guide	▪ Configuration and management of SPA9x2 series IP phones ▪ Deployment options with or without the SPA9000 IP PBX ▪ SPA9x2 series IP phones	VARs and Service Providers
SPA9x2 Phone User Guide	▪ Phone setup ▪ Phone features ▪ SPA9x2 series IP phones	VARs and phone end-users
Analog Telephone Adapter Administration Guide	▪ Administration and use of Cisco Small Business ATAs ▪ PAP2T, SPA2102, SPA3102, SPA8000, and WRTP54G	VARs, system administrators, and Service Providers
User Guide for switch		
User Guide for router		